harman/kardon

AVR510

A/V DOLBY DIGITAL RECEIVER

SERVICE MANUAL

CONTENTS

ESD WARNING……2
LEAKAGE TESTING……...……...3
BASIC SPECIFICATIONS……4
FRONT PANEL CONTROLS……5
REAR PANEL CONNECTIONS……..……9
REMOTE CONTROL FUNCTIONS……..11
TROUBLESHOOTING GUIDE……..…14
PROCESSOR RESET……..14
IDLE CURRENT/TUNER ALIGNMENT…....15
UNIT EXPLODED VIEW……..…..16
EXPLODED VIEW PARTS LIST……..17
SERVICE BULLETIN HK2001-01……18
SERVICE BULLETIN HK2001-03……..20
SERVICE BULLETIN HK2003-02……..21
SERVICE BULLETIN HK2003-07……..22
TECH TIP HKTT2002-01……24
TECH TIP HKTT2003-01……26
BLOCK DIAGRAMS……..……27
PCB DRAWINGS……..……29
ELECTRICAL PARTS LIST……41
SEMICONDUCTOR PINOUTS……..……62
SCHEMATICS……..…111
WIRING DIAGRAM……..129
PACKAGE……132

harman/kardon, Inc.

250 Crossways Park Dr.

Woodbury, New York 11797

Rev4 – 6/2005

ELECTROSTATICALLY SENSITIVE (ES) DEVICES

Some semiconductor (solid state) devices can be damaged easily by static electricity. Such components commonly are called Electrostatically Sensitive (ES) Devices. Examples of typical ES devices are integrated circuits and some field effect transistors and semiconductor "chip" components.

The following techniques should be used to help reduce the incidence of component damage caused by static electricity.

1. Immediately before handling any semiconductor component or semiconductor-equipped assembly, drain off any electrostatic charge on your body by touching a known earth ground. Alternatively, obtain and wear a commercially available discharging wrist strap device, which should be removed for potential shock reasons prior to applying power to the unit under test.
2. After removing an electrical assembly equipped with ES devices, place the assembly on a conductive surface such as aluminum foil, to prevent electrostatic charge build-up or exposure of the assembly.
3. Use only a grounded-tip soldering iron to solder or unsolder ES devices.
4. Use only an anti-static solder removal device. Some solder removal devices not classified as "anti-static" can generate electrical charges sufficient to damage ES devices.
5. Do not use freon-propelled chemicals. These can generate electrical change sufficient to damage ES devices.
6. Do not remove a replacement ES device from its protective package until immediately before you are ready to install it. (Most replacement ES devices are packaged with leads electrically shorted together by conductive foam, aluminum foil or comparable conductive material.)
7. Immediately before removing the protective material from the leads of a replacement ES device, touch the protective material to the chassis or circuit assembly into which the device will be installed.

   CAUTION : Be sure no power is applied to the chassis or circuit, and observe all other safety precautions.
8. Minimize bodily motions when handling unpackaged replacement ES devices. (Otherwise harmless motion such as the brushing together or your clothes fabric or the lifting of your foot from a carpeted floor can generate static electricity sufficient to damage an ES devices.

PRODUCT SAFETY NOTICE

Each precaution in this manual should be followed during servicing.

Components identified with the IEC symbol ⚠ in the parts list are special significance to safety. When replacing a component identified with ⚠, use only the replacement parts designated, or parts with the same ratings or resistance, wattage, or voltage that are designated in the parts list in this manual. Leakage-current or resistance measurements must be made to determine that exposed parts are acceptably insulated from the supply circuit before retuming the product to the customer.

LEAKAGE TEST(FOR SERVICE ENGINEERS IN THE U.S.A)

Before returning the unit to the user, perform the following safety checks :

1. Inspect all lead dress to make certain that leads are not pinched or that hardware is not lodged between the chassis and other metal parts in the unit.
2. Be sure that any protective devices such as nonmetallic control knobs, insulating fish-papers, cabinet backs, adjustment and compartment covers or shields, isolation resistor-capacity networks, mechanical insulators, etc. Which were removed for the servicing are properly re-installed.
3. Be sure that no shock hazard exists ; check for leakage current using Simpson Model 229 Leakage Tester, standard equipment item No. 21641, RCA Model WT540A or use alternate method as follows : Plug the power cord directly Into a 120 volt AC receptacle (do not use an Isolation Transformer for this test). Using two clip leads, connect a 1500 ohms, 10watt Resistor paralleled by a 0.15uF capacitor, in series with all exposed metal cabinet parts and a known earth ground, such as a water pipe or conduit. Use a VTVM or VOM with 1000 ohms per volt, or higher sensitivity to measure the AC voltage drop across the resistor. (See diagram) Move the resistor connection to each exposed metal part having a return path to the chassis (antenna, metal, cabinet, screw heads, knobs and control shafts, escutcheon, etc.) and measure the AC voltage drop across the resistor. (This test should be performed with the 0.35 volt RMS or more is excessive and indicates a potential shock hazard which must be corrected before returning the unit to the owner.

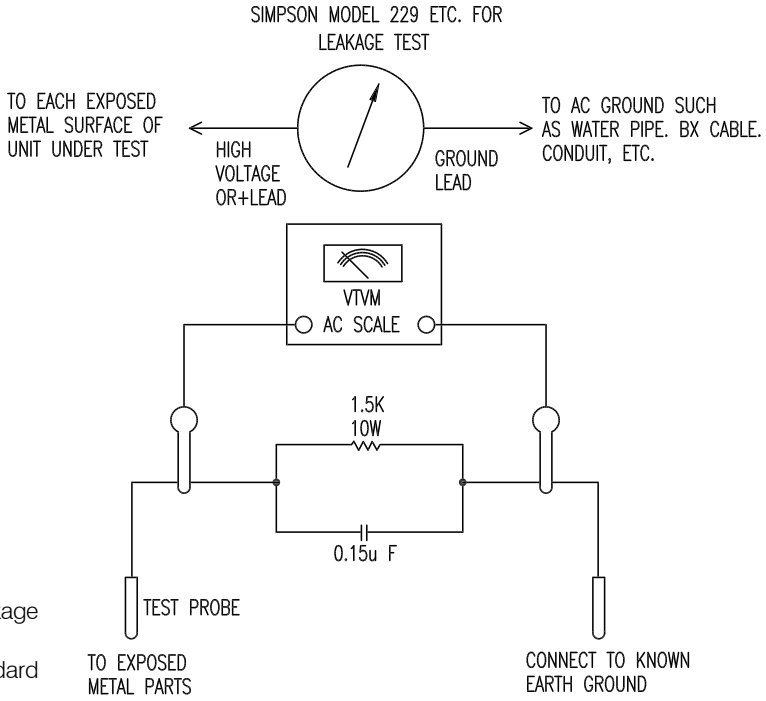

Technical Specifications

Audio Section

Stereo Mode
Continuous Average Power (FTC)

80 Watts per channel, 20Hz–20kHz,
@ < 0.07% THD, both channels driven into 8 ohms

Five-Channel Surround Modes
Power Per Individual Channel

Front L&R channels:
70 Watts per channel
@ < 0.07% THD, 20Hz–20kHz into 8 ohms

Center channel:
70 Watts @ < 0.07% THD, 20Hz–20kHz into 8 ohms

Surround channels:
70 Watts per channel
@ < 0.07% THD, 20Hz–20kHz into 8 ohms

Input Sensitivity/Impedance	
Linear (High-Level)	200mV/47k ohms
Signal-to-Noise Ratio (IHF-A)	95dB
Surround System Adjacent Channel Separation	
Analog Decoding (Pro Logic, etc.)	40dB
Dolby Digital (AC-3)	55dB
DTS	55dB
Frequency Response @ 1W (+0dB, –3dB)	10Hz –100kHz
High Instantaneous Current Capability (HCC)	±35 Amps
Transient Intermodulation Distortion (TIM)	Unmeasurable
Rise Time	16 µsec
Slew Rate	40V/µsec

FM Tuner Section

Frequency Range	87.5–108MHz
Usable Sensitivity	IHF 1.3 µV/13.2dBf
Signal-to-Noise Ratio	Mono/Stereo 70/68dB
Distortion	Mono/Stereo 0.2/0.3%
Stereo Separation	40dB @ 1kHz
Selectivity	±400kHz, 70dB
Image Rejection	80dB
IF Rejection	90dB
Tuner Output Level	1kHz, ±75kHz Dev 500mV

AM Tuner Section

Frequency Range	520–1710kHz
Signal-to-Noise Ratio	45dB
Usable Sensitivity	Loop 500µV
Distortion	1kHz, 50% Mod 0.8%
Selectivity	±10kHz, 30dB

Video Section

Television Format	NTSC
Input Level/Impedance	1Vp-p/75 ohms
Output Level/Impedance	1Vp-p/75 ohms
Video Frequency Response	10Hz–8MHz (–3dB)

General

Power Requirement	AC 120V/60Hz
Power Consumption	78W idle, 694W maximum (2 channels driven)
Dimensions (Max)	
Width	17.3 inches (440mm)
Height	6.5 inches (165mm)
Depth	17.1 inches (435mm)
Weight	35 lb (15.9 kg)

Depth measurement includes knobs, buttons and terminal connections.
Height measurement includes feet and chassis.
All features and specifications are subject to change without notice.

Harman Kardon is a registered trademark, and Power for the Digital Revolution is a trademark, of Harman Kardon, Inc.

EzSet™ is a trademark of Harman International Industries, Inc. (Patent No. 5,386,478).

*Manufactured under license from Dolby Laboratories.
"Dolby," "Pro Logic," "AC-3" and the Double-D symbol are trademarks of Dolby Laboratories. Confidential Unpublished Works. ©1992–1999 Dolby Laboratories, Inc. All rights reserved.

DTS and DTS Surround are trademarks of Digital Theater Systems, Inc.

UltraStereo is a trademark of UltraStereo Corp.

VMAx is a registered trademark of Harman International Industries, Inc., and is an implementation of Cooper Bauck Transaural Stereo under patent license.

Logic 7 is a registered trademark of Lexicon, Inc.

Crystal is a registered trademark of Cirrus Logic Corp.

HDCD system manufactured under license from Pacific Microsonics, Inc. This product is covered by one or more of the following: In the USA: 5,479,168; 5,638,074; 5,640,161; 5,808,574; 5,838,274; 5,854,600; 5,864,311; 5,872,531; and in Australia: 669114. Other patents pending.

Front Panel Controls

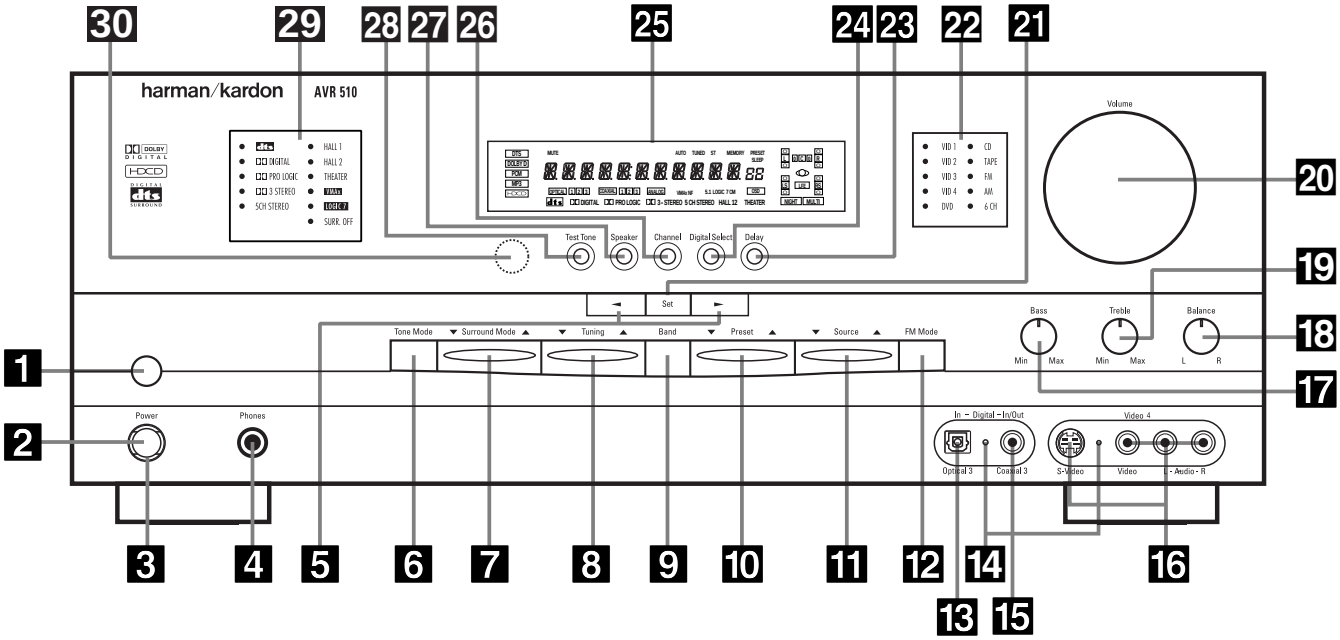

1 Main Power Switch
2 System Power Control
3 Power Indicator
4 Headphone Jack
5 Selector Buttons
6 Tone Mode
7 Surround Mode Selector
8 Tuning Selector
9 Tuner Band Selector
10 Preset Stations Selector
11 Input Source Selector
12 FM Mode Selector
13 Digital Optical 3 Input
14 Input/Output Status Indicator
15 Digital Coax 3 Jack
16 Video 4 Input Jacks
17 Bass Control
18 Balance Control
19 Treble Control
20 Volume Control
21 Set Button
22 Input Indicators
23 Delay
24 Digital Input Selector
25 Main Information Display
26 Channel Select Button
27 Speaker Select Button
28 Test Tone Selector
29 Surround Mode Indicators
30 Remote Sensor Window

1 Main Power Switch: Press this button to apply power to the AVR 510. When the switch is pressed in, the unit is placed in a Standby mode, as indicated by the amber **Power Indicator 3** surrounding the **System Power Control 2**. This button MUST be pressed in to operate the unit. To turn the unit off and prevent the use of the remote control, this switch should be pressed until it pops out from the front panel so that the word "OFF" may be read at the top of the switch.

NOTE: This switch is normally left in the "ON" position.

2 System Power Control: When the **Main Power Switch 1** is "ON," press this button to turn on the AVR 510; press it again to turn the unit off. Note that the **Power Indicator 3** surrounding the switch will turn green when the unit is on.

3 Power Indicator: This LED will be lit in amber when the unit is in the Standby mode to signal that the unit is ready to be turned on. When the unit is in operation, the indicator will turn green.

4 Headphone Jack: This jack may be used to listen to the AVR 510's output through a pair of headphones. Be certain that the headphones have a standard 1/4" stereo phone plug. Note that the main room speakers will automatically be turned off when the headphone jack is in use.

5 Selector Buttons: When you are establishing the AVR 510's configuration settings, use these buttons to select from the choices available, as shown in the **Main Information Display 25** or the on-screen displays.

6 Tone Mode: Pressing this button enables or disables the Bass and Treble tone controls. When the button is pressed so that the words TONE IN appear in the **Main Information Display 25**, the settings of the **Bass 17** and **Treble 19** controls may be used to adjust the output signals. When the button is pressed so that the words TONE OUT appear in the **Main Information Display 25**, the output signal will be "flat," without any bass or treble alteration, no matter how the actual **Bass** and **Treble** controls **17 19** are adjusted.

Front Panel Controls

7 Surround Mode Selector: Press this button to change the surround mode by scrolling through the list of available modes. Note that depending on the type of input, some modes are not always available. (See page 27 for more information about surround modes.)

8 Tuning Selector: Press the left side of the button to tune lower-frequency stations and the right side of the button to tune higher-frequency stations. When a station with a strong signal is reached, the **TUNED** indicator W will be lit in the **Main Information Display** 25 .

To tune manually, tap the button lightly and note that the tuner will step up one frequency increment per button press. When the button is held for a few seconds you will note that the unit will quickly search the frequency band. Release it once the fast tuning starts; the tuner will automatically scan for the next station with an acceptable signal and then stop.

9 Tuner Band Selector: Pressing this button will automatically switch the AVR 510 to the Tuner mode. Pressing it again will switch between the AM and FM frequency bands. (See page 30 for more information on the tuner.)

10 Preset Stations Selector: Press this button to scroll up or down through the list or stations that have been entered into the preset memory. (See page 30 for more information on tuner programming.)

11 Input Source Selector: Press this button to change the input by scrolling up or down through the list of input sources.

12 FM Mode Selector: Press this button to select Auto or Manual tuning. When the button is pressed so that the **AUTO** indicator X lights, the tuner will search for the next station with an acceptable signal when the **Tuning Selector** 8 21 E is pressed. When the button is pressed so that the **AUTO** indicator X is not lit, each press of the **Tuning Selector** 8 21 E will increase the frequency. (See page 30 for more information on using the tuner.)

13 Digital Optical 3 Input: Connect the optical digital output of an audio or video product to this jack. When the input is not in use, be certain to keep the plastic cap installed to avoid dust contamination that might degrade future performance.

14 Input/Output Status Indicator: These LED indicators will normally light green to show that the front panel Video 4 A/V jacks or the Coaxial 3 digital jack is operating as an input. When either of these jacks has been configured for use as an output, the indicator will turn red to show that the jack may be used for recording. (See page 20 for more information on configuring the front panel jacks as outputs, rather than inputs.)

15 Digital Coax 3 Jack: This jack is normally used for connection to the output of portable audio devices, video game consoles or other products that have a coax digital jack. It may also be configured as an output jack, to feed a digital signal to a CD-R, MiniDisc or other digital recording device. (See page 31 for information on configuring the Digital Coax 3 Jack to an output.)

16 Video 4 Input Jacks: These audio/video jacks may be used for temporary connection to video games or portable audio/video products such as camcorders and portable audio players.

17 Bass Control: Turn this control to modify the low-frequency output of the left/right channels by as much as ±10dB. Set this control to a suitable position for your taste or room acoustics.

18 Balance Control: Turn this control to change the relative volume for the front left/right channels.

NOTE: For proper operation of the surround modes this control should be at the midpoint, or "12 o'clock", position.

19 Treble Control: Turn this control to modify the high-frequency output of the left/right channels by as much as ±10dB. Set this control to a suitable position for your taste or room acoustics.

20 Volume Control: Turn this knob clockwise to increase the volume, counterclockwise to decrease the volume. If the AVR 510 is muted, adjusting volume control will automatically release the unit from the silenced condition.

21 Set Button: When making choices during the setup and configuration process, press this button to enter the desired setting as shown in the **Main Information Display** 25 into the AVR 510's memory.

22 Input Indicators: A green LED will light in front of the input that is currently being used as the source for the AVR 510.

23 Delay: Press this button to begin the sequence of steps required to enter delay time settings. (See page 21 for more information on delay times.)

24 Digital Input Selector: When playing a source that has a digital output, press this button to select between the **Optical** 13 31 and **Coaxial** 15 32 **Digital** inputs. (See page 28 for more information on digital audio.)

25 Main Information Display: This display delivers messages and status indications to help you operate the receiver. (See pages 7 & 8 for a complete explanation of the Information Display.)

26 Channel Select Button: Press this button to begin the process of trimming the channel output levels using an external audio source. (For more information on output level trim adjustment, see page 31.)

27 Speaker Select Button: Press this button to begin the process of selecting the speaker positions that are used in your listening room. (See page 22 for more information on setup and configuration.)

28 Test Tone Selector: Press this button to begin the process of adjusting the channel output levels using the internal test tone as a reference. (For more information on output level adjustment, see page 23.)

29 Surround Mode Indicators: A green LED will light in front of the surround mode that is currently in use.

30 Remote Sensor Window: The sensor behind this window receives infrared signals from the remote control. Aim the remote at this area and do not block or cover it unless an external remote sensor is installed.

Front Panel Information Display

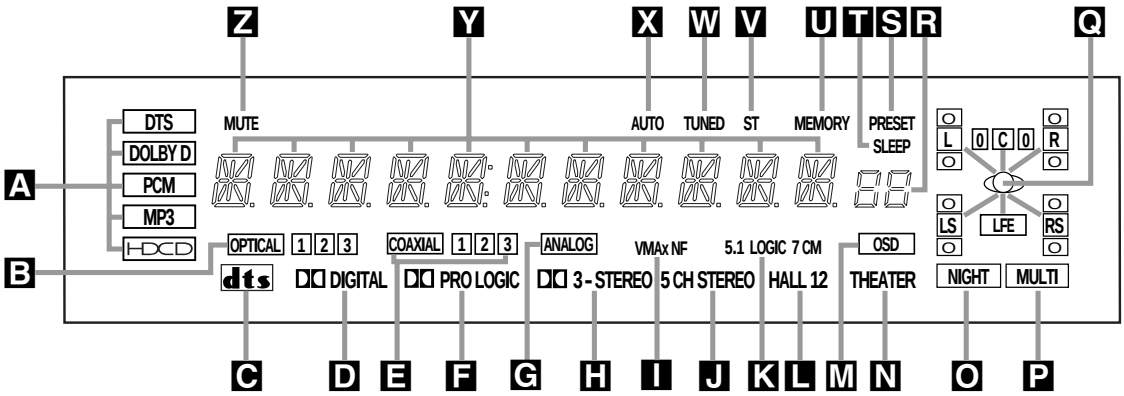

- **A** Bitstream Indicators
- **B** Optical Source Indicators
- **C** DTS Mode Indicator
- **D** Dolby Digital Indicator
- **E** Coaxial Source Indicators
- **F** Dolby Pro Logic Indicator
- **G** Analog Input Indicator
- **H** Dolby 3 Stereo Indicator
- **I** VMAx Mode Indicator
- **J** 5-Channel Stereo Indicator
- **K** Logic 7 Mode Indicators
- **L** Hall Mode Indicators
- **M** OSD Indicator
- **N** Theater Mode Indicator
- **O** Night Mode Indicator
- **P** Multiroom Indicator
- **Q** Speaker/Channel Input Indicators
- **R** Preset Number/Sleep Timer
- **S** Preset Indicator
- **T** Sleep Indicator
- **U** Memory Indicator
- **V** Stereo Indicator
- **W** Tuned Indicator
- **X** Auto Indicator
- **Y** Main Information Display
- **Z** Mute Indicator

A Bitstream Indicators: When the input is a digital source, one of these indicators will light to display the specific type of data signal in use.

B Optical Source Indicators: These indicators light to show when an Optical Digital Input has been selected.

C DTS Mode Indicator: This indicator lights when a DTS-encoded source is playing.

D Dolby Digital Indicator: This indicator lights when a Dolby Digital source is being played.

E Coaxial Source Indicators: These indicators light to show when a Coaxial Digital Input has been selected.

F Dolby Pro Logic Indicator: This indicator lights when the Dolby Pro Logic mode has been selected.

G Analog Input Indicator: This indicator lights when an analog input source has been selected.

H Dolby 3 Stereo Indicator: This indicator lights when the Dolby 3 Stereo Mode has been selected.

I VMAx Mode Indicator: This indicator lights when the VMAx mode is in use. VMAx F appears when the Far Field VMAx mode is selected; VMAx N appears when the Near Field VMAx mode is selected. (See page 27 for a description of the VMAx modes.)

J 5-Channel Stereo Indicator: This indicator lights when the 5-Channel Stereo mode has been selected.

K Logic 7 Mode Indicators: These indicators light when the Logic 7 mode is in use. LOGIC 7C appears for the Cinema version of Logic 7, LOGIC 7M appears for the Music version of Logic 7. (See page 27 for a description of the Logic 7 Modes.)

L Hall Mode Indicators: These indicators light when one of the Hall modes has been selected.

M OSD Indicator: When the OSD system is in use, this indicator lights to remind you that the other indicators in this display do not function when the On Screen Display is being used.

N Theater Mode Indicator: This indicator lights to show that the Theater mode is in use.

O Night Mode Indicator: This indicator lights when the AVR 510 is in the Night mode, which preserves the dynamic range of digital program material at low volume levels.

P Multiroom Indicator: This indicator lights when the multiroom system is active. Note that it will remain lit when the multiroom system is in use even though the main room system is in the Standby mode and all other indicators are dark. (See page 35 for more information on the Multiroom system.)

Q Speaker/Channel Input Indicators: These indicators are multipurpose, indicating either the speaker type selected for each channel or the incoming data-signal configuration. The left, center, right, right surround and left surround speaker indicators are composed of three boxes, while the subwoofer is a single box. The center box lights when a "Small" speaker is selected, and the two outer boxes light when "Large" speakers are selected. When none of the boxes are lit for the center, surround or subwoofer channels, no speaker has been selected for one of those positions. (See page 22 for more information on configuring speakers.) The letters inside each of the center boxes display the active input channels. For standard analog inputs, only the L and R will light, indicating a stereo input. When a digital source is playing, the indicators will light to display the channels being received at the digital input. When the letters flash, the digital input has been interrupted. (See pages 23 & 29 for more information on the Channel Indicators.)

R Preset Number/Sleep Timer: When the tuner is in use, these numbers indicate the specific preset memory location in use. (See page 31 for more information on preset stations.) When the Sleep function is in use, these numbers show how many minutes remain before the unit goes into the Standby mode.

Front Panel Information Display

S Preset Indicator: This indicator lights when the tuner is in use to show that the **Preset Number/Sleep Timer R** is showing the station's preset memory number. (See page 31 for more information on tuner presets.)

T Sleep Indicator: This indicator lights when the Sleep function is in use. The numbers in the **Preset Number/Sleep Timer** indicator will show the minutes remaining before the AVR 510 goes into the Standby mode. (See page 26 for more information on the Sleep function.)

U Memory Indicator: This indicator flashes when entering presets and other information into the tuner's memory.

V Stereo Indicator: This indicator lights when an FM station is being tuned in stereo.

W Tuned Indicator: This indicator lights when a station is being received with sufficient signal strength to provide acceptable listening quality.

X Auto Indicator: This indicator lights when the tuner's Auto mode is in use.

Y Main Information Display: This display shows messages relating to the status, input source, surround mode, tuner, volume level or other aspects of the AVR 510's operation.

Z Mute Indicator: This indicator lights to remind you that the AVR 510's output has been silenced by pressing the **Mute** button ● 38. Press the Mute button again to return to the previously selected output level.

Rear Panel Connections

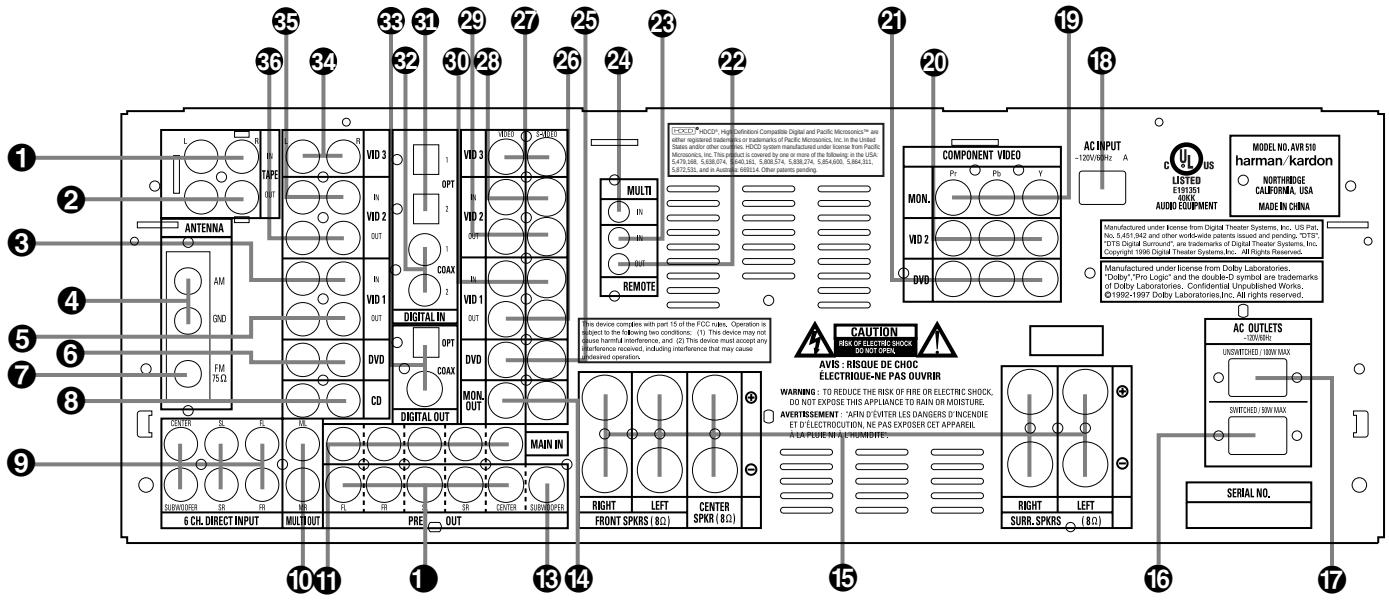

1. Tape Inputs
2. Tape Outputs
3. Video 1 Audio Inputs
4. AM Antenna
5. Video 1 Audio Outputs
6. DVD Audio Inputs
7. FM Antenna
8. CD Inputs
9. 6-Channel Direct Inputs
10. Multiroom Outputs
11. Amplifier Inputs
12. Preamp Outputs
13. Subwoofer Output
14. Video Monitor Outputs
15. Speaker Outputs
16. Switched AC Accessory Outlet
17. Unswitched AC Accessory Outlet
18. AC Power Cord
19. Component Video Outputs
20. Video 2 Component Video Inputs
21. DVD Component Video Inputs
22. Remote IR Output
23. Remote IR Input
24. Multiroom IR Input
25. DVD Video Inputs
26. Video 1 Video Outputs
27. Video 3 Video Inputs
28. Video 2 Video Inputs
29. Video 2 Video Outputs
30. Video 1 Video Inputs
31. Optical Digital Inputs
32. Coaxial Digital Inputs
33. Digital Audio Outputs
34. Video 3 Audio Inputs
35. Video 2 Audio Inputs
36. VIdeo 2 Audio Outputs

Rear Panel Connections

❶ **Tape Inputs:** Connect these jacks to the **PLAY/OUT** jacks of an audio recorder.

❷ **Tape Outputs:** Connect these jacks to the **RECORD/INPUT** jacks of an audio recorder.

❸ **Video 1 Audio Inputs:** Connect these jacks to the **PLAY/OUT** audio jacks on a VCR or other video source.

❹ **AM Antenna:** Connect the AM loop antenna supplied with the receiver to these terminals. If an external AM antenna is used, make connections to the **AM** and **GND** terminals in accordance with the instructions supplied with the antenna.

❺ **Video 1 Audio Outputs:** Connect these jacks to the **RECORD/INPUT** audio jacks on a VCR.

❻ **DVD Audio Inputs:** Connect these jacks to the analog audio jacks on a DVD or other video source.

❼ **FM Antenna:** Connect the supplied indoor or an optional external FM antenna to this terminal.

❽ **CD Inputs:** Connect these jacks to the output of a compact disc player or CD changer.

❾ **6-Channel Direct Inputs:** If an external digital audio decoder is used, connect the outputs of that decoder to these jacks.

❿ **Multiroom Outputs:** Connect these jacks to an optional audio power amplifier to listen to the source selected by the mulitroom system in a remote room.

⓫ **Amplifier Inputs:** When the jumper pins that link the **Preamp Outputs** ❶ with these inputs are removed, these jacks may be used to connect an external source or the AVR 510's multiroom system to the internal amplifiers. (See page 17 for more information on using these connections.)

❶ **Preamp Outputs:** When the jumper pins that link the **Amplifier Inputs** ⓫ with these outputs are removed, these jacks may be connected to an external power amplifier.

⓭ **Subwoofer Output:** Connect this jack to the line-level input of a powered subwoofer. If an external subwoofer amplifier is used, connect this jack to the subwoofer amplifier input.

⓮ **Video Monitor Outputs:** Connect this jack to the composite or S-Video input of a TV monitor or video projector to view the on-screen menus and the output of any standard video source selected by the receiver's video switcher.

⓯ **Speaker Outputs:** Connect these outputs to the matching + or – terminals on your left and right surround speakers. When making speaker connections always make certain to maintain correct polarity by connecting the red (+) terminals on the AVR 510 to the red (+) terminals on the speakers and the black (–) terminals on the AVR 510 to the black (–) terminals on the speakers. See page 15 for more information on speaker polarity.

⓰ **Switched AC Accessory Outlet:** This outlet may be used to power any device you wish to have turned on when the AVR 510 is turned on with the **System Power Control** button **2**.

⓱ **Unswitched AC Accessory Outlet:** This outlet may be used to power any AC device. The power will remain on at this outlet regardless of whether the AVR 510 is on or off.

Note: The total power consumption of all devices connected to the accessory outlets should not exceed 100 watts.

⓲ **AC Power Cord:** Connect the AC plug to an unswitched AC wall output.

⓳ **Component Video Outputs:** Connect these outputs to the component video inputs of a video projector or monitor. When a source connected to one of the two **Component Video Inputs** ⓴㉑ is selected the signal will be sent to these jacks.

⓴ **Video 2 Component Video Inputs:** Connect the Y/Pr/Pb component video outputs of a set top converter box or other video product to these jacks.

㉑ **DVD Component Video Inputs:** Connect the Y/Pr/Pb component video outputs of a DVD player to these jacks.

㉒ **Remote IR Output:** This connection permits the IR sensor in the receiver to serve other remote controlled devices. Connect this jack to the "IR IN" jack on Harman Kardon (or other compatible) equipment.

㉓ **Remote IR Input:** If the AVR 510's front-panel IR sensor is blocked due to cabinet doors or other obstructions, an external IR sensor may be used. Connect the output of the sensor to this jack.

㉔ **Multiroom IR Input:** Connect the output of an IR sensor in a remote room to this jack to operate the AVR 510's multiroom control system.

㉕ **DVD Video Inputs:** Connect these jacks to the composite or S-Video output jacks on a DVD or other video source.

㉖ **Video 1 Video Outputs:** Connect these jacks to the **RECORD/INPUT** composite or S-Video jack on a VCR.

㉗ **Video 3 Video Inputs:** Connect these jacks to the **PLAY/OUT** composite or S-Video jacks on a VCR or other video source.

㉘ **Video 2 Video Inputs:** Connect these jacks to the **PLAY/OUT** composite or S-Video jacks on a VCR or other video source.

㉙ **Video 2 Video Outputs:** Connect these jacks to the **RECORD/INPUT** composite or S-Video jacks on a VCR.

㉚ **Video 1 Video Inputs:** Connect these jacks to the **PLAY/OUT** composite or S-Video jacks on a VCR or other video source.

㉛ **Optical Digital Inputs:** Connect the optical digital output from a DVD player, HDTV receiver, LD player or CD player to these jacks. The signal may be either a Dolby Digital signal, a DTS signal or a standard PCM digital source.

㉜ **Coaxial Digital Inputs:** Connect the coax digital output from a DVD player, HDTV receiver, LD player or CD player to these jacks. The signal may be either a Dolby Digital signal, DTS signal or a standard PCM digital source. Do not connect the RF digital output of an LD player to these jacks.

㉝ **Digital Audio Outputs:** Connect these jacks to the matching digital input connector on a digital recorder such as a CD-R or MiniDisc recorder.

㉞ **Video 3 Audio Inputs:** Connect these jacks to the **PLAY/OUT** audio jacks on a VCR or other video source.

㉟ **Video 2 Audio Inputs:** Connect these jacks to the **PLAY/OUT** audio jacks on a VCR or other video source.

㊱ **Video 2 Audio Outputs:** Connect these jacks to the **RECORD/INPUT** audio jacks on a VCR or other video source.

Main Remote Control Functions

1. Power On Button
2. IR Transmitter Window
3. Program/SPL Indicator
4. Power Off Button
5. Input Selectors
6. AVR Selector
7. AM/FM Tuner Select
8. Learn Button
9. Test Button
10. Sleep Button
11. Surround Mode Selector
12. Night Mode
13. Channel Select Button
14. ▲/▼ Buttons
15. ◄ Button
16. Set Button
17. Digital Select
18. Numeric Keys
19. Tuner Mode
20. Direct Button
21. Tuning Up/Down
22. OSD Button
23. Macro Buttons
24. Transport Controls
25. Skip Up/Down Buttons
26. Disc Skip Buttons
27. Preset Up/Down
28. Clear Button
29. Memory Button
30. Delay/Prev. Ch.
31. ► Button
32. Speaker Select
33. Multiroom
34. Volume Up/Down
35. TV/Video Selector
36. SPL Indicator Select
37. 6-Channel Direct Input
38. Mute
39. EzSet Sensor Microphone
40. Light Button

NOTE: The function names shown here are each button's feature when used with the AVR 510. Most buttons have additional functions when used with other devices. See pages 41–42 for a list of these functions.

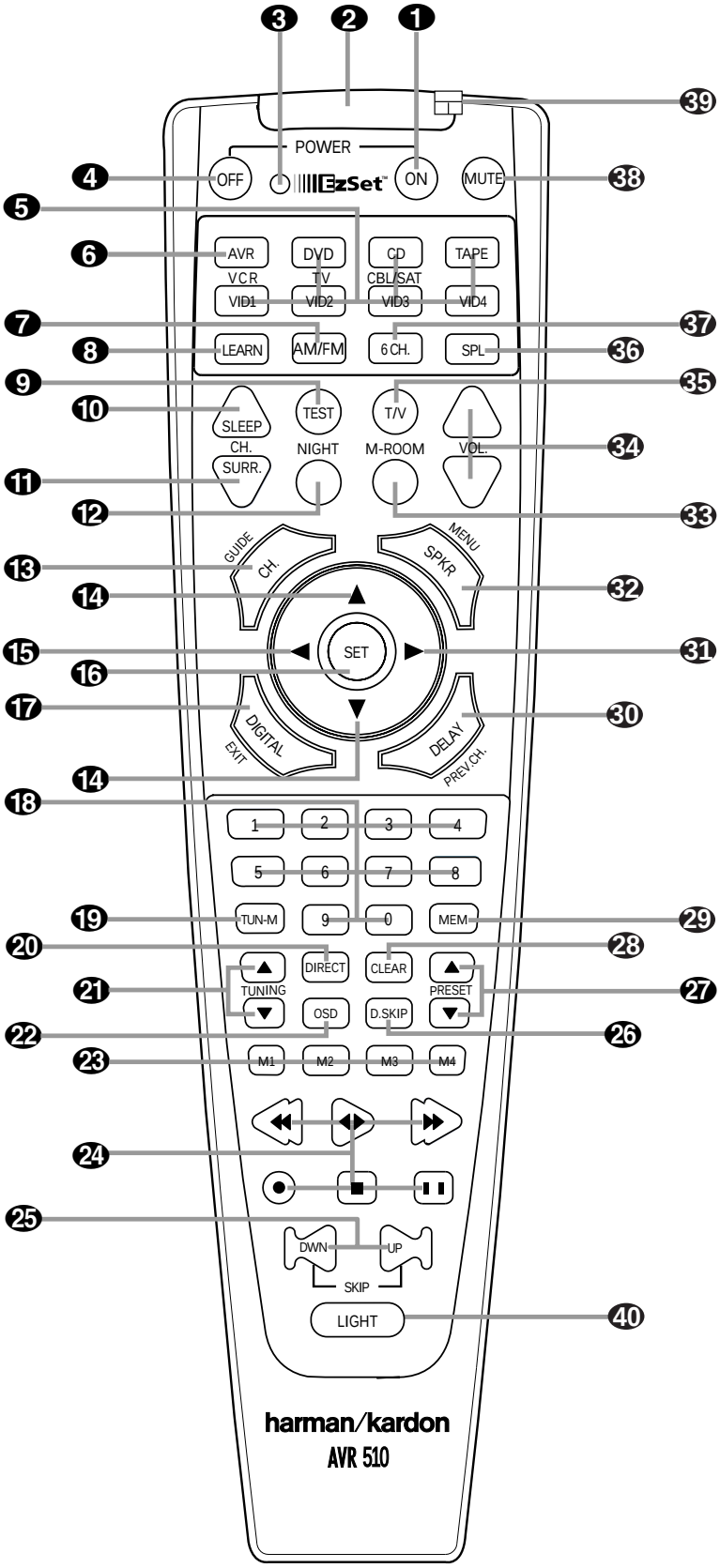

Main Remote Control Functions

IMPORTANT NOTE: The AVR 510's remote may be programmed to control up to eight devices, including the AVR 510. Before using the remote, it is important to remember to press the **Input Selector** button ❺ that corresponds to the unit you wish to operate. In addition, the AVR 510's remote is shipped from the factory to operate the AVR 510 and most Harman Kardon CD or DVD players and cassette decks. The remote is also capable of operating a wide variety of other products using the control codes that are part of the remote. Before using the remote with other products, follow the instructions on pages 36–40 to program the proper codes for the products in your system.

It is also important to remember that many of the buttons on the remote take on different functions, depending on the product selected using the Device Control Selectors. The descriptions shown here primarily detail the functions of the remote when it is used to operate the AVR 510. (See page 40 for information about alternate functions for the remote's buttons.)

❶ **Power On Button:** Press this button to turn on the power to a device selected by pressing one of the **Input Selectors** ❺.

❷ **IR Transmitter Window:** Point this window towards the AVR 510 when pressing buttons on the remote to make certain that infrared commands are properly received.

❸ **Program/SPL Indicator:** This three-color indicator is used to guide you through the process of programming the remote or learning commands from a remote into the AVR 510's remote code memory and it is also used as a level indicator when using the remote's EzSet capabilities. (See page 23 for more information on setting output levels, and see page 36 for information on programming the remote.)

❹ **Power Off Button:** Press this button to place the AVR 510 or a selected device in the Standby mode. Note that this will turn off the main room functions, but if the Multiroom system is activated, it will continue to function.

❺ **Input Selectors:** Pressing one of these buttons will perform three actions at the same time. First, if the AVR 510 is not turned on, this will power up the unit. Next, it will select the source shown on the button as the input to the AVR 510. Finally, it will change the remote control so that it controls the device selected. After pressing one of these buttons you must press the **AVR Selector** button ❻ again to operate the AVR 510's functions with the remote.

❻ **AVR Selector:** Pressing this button will switch the remote so that it will operate the AVR 510's functions. If the AVR 510 is in the Standby mode, it will also turn the AVR 510 on.

❼ **AM/FM Tuner Select:** Press this button to select the AVR 510's tuner as the listening choice. Pressing this button when the tuner is already in use will select between the AM and FM bands.

❽ **Learn Button:** Press this button to begin the process of "learning" the codes from another product's remote into the AVR 510's remote. (See page 37 for more information on using the remote's learning function.)

❾ **Test Button:** Press this button to begin the sequence used to calibrate the AVR 510's output levels. (See page 23 for more information on calibrating the AVR 510.)

❿ **Sleep Button:** Press this button to place the unit in the Sleep mode. After the time shown in the display, the AVR 510 will automatically go into the Standby mode. Each press of the button changes the time until turn-off in the following order:

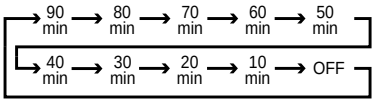

Note that this button is also used to change channels on your TV when the TV is selected.

When the AVR 510 remote is being programmed with the codes to operate another device, this button is also used in the "Auto Search" process. (See page 36 for more information on programming the remote.)

⓫ **Surround Mode Selector:** Press this button to begin the process of changing the surround mode. After the button has been pressed, use the ▲/▼ buttons ⓮ to select the desired surround mode. (See page 28 for more information.) Note that this button is also used to tune channels when the TV is selected using the device **Input Selector** ❺. When the AVR 510 remote is being programmed with the codes of another device, this button is also used in the "Auto Search" process. (See page 36 for more information on programming the remote.)

⓬ **Night Mode:** Press this button to activate the Night mode. This mode is available in specially encoded digital sources, and it preserves dialog (center channel) intelligibility at low volume levels.

⓭ **Channel Select Button:** This button is used to start the process of setting the AVR 510's output levels to an external source. Once this button is pressed, use the ▲/▼ buttons ⓮ to select the channel being adjusted, then press the **Set** button ⓰, followed by the ▲/▼ buttons again, to change the level setting. (See page 31 for more information.)

⓮ ▲/▼ **Buttons:** These are multi-purpose buttons. They will be used most frequently to select a surround mode. To change the surround mode, first press the **Surround Mode** ▼ selector ⓫. Next press these buttons to scroll up or down through the list of surround modes that appear in the **Main Information Display** 25. These buttons are also used to increase or decrease output levels when configuring the unit with either the internal test tone or an external source. They are also used to enter delay time settings after the **Delay** button ㉚ has been pressed.

⓯ ◀ **Button:** This button is used to change the menu selection or setting during some of the setup procedures for the AVR 510.

⓰ **Set Button:** This button is used to enter settings into the AVR 510's memory. It is also used in the setup procedures for delay time, speaker configuration and channel output level adjustment.

⓱ **Digital Select:** Press this button to assign one of the digital inputs 13 15 to a source. (See page 28 for more information on using digital inputs.)

⓲ **Numeric Keys:** These buttons serve as a ten-button numeric keypad to enter tuner preset positions. They are also used to select channel numbers when **TV** has been selected on the remote, or to select track numbers on a CD, DVD or LD player, depending on how the remote has been programmed.

⓳ **Tuner Mode:** Press this button when the tuner is in use to select between automatic tuning and manual tuning. When the button is pressed so that the **AUTO** indicator X goes out, pressing the **Tuning** buttons ㉑ 8 E will move the frequency up or down in single-step increments. When the FM band is in use, pressing this button when a station's signal is weak will change to monaural reception. (See page 30 for more information.)

Main Remote Control Functions

⑳ **Direct Button:** Press this button when the tuner is in use to start the sequence for direct entry of a station's frequency. After pressing the button, simply press the proper **Numeric Keys** ⑱ to select a station. (See page 30 for more information on the tuner.)

㉑ **Tuning Up/Down:** When the tuner is in use, these buttons will tune up or down through the selected frequency band. If the **Tuner Mode** button ⑲ 12 has been pressed so that the **AUTO** indicator X is illuminated, pressing and holding either of the buttons for three seconds will cause the tuner to seek the next station with acceptable signal strength for quality reception. When the **AUTO** indicator X is NOT illuminated, pressing these buttons will tune stations in single-step increments. (See page 30 for more information.)

㉒ **OSD Button:** Press this button to activate the On Screen Display (OSD) system used to set up or adjust the AVR 510's parameters.

㉓ **Macro Buttons:** Press these buttons to store or recall a "Macro", which is a preprogrammed sequence of commands stored in the remote. (See page 37 for more information on storing and recalling macros.)

㉔ **Transport Controls:** These buttons do not have any functions for the AVR 510, but they may be programmed for the forward/reverse play operation of a wide variety of CD or DVD players, and audio or video cassette recorders. (See page 38 for more information.)

㉕ **Skip Up/Down Buttons:** These buttons do not have a direct function with the AVR 510, but when used with a compatibly programmed CD or DVD changer they will change the disc currently being played in the changer.

㉖ **Disc Skip Buttons:** These buttons have no direct function for the AVR 510, but they are often used when the remote is programmed to operate a CD or DVD changer to change the discs in the changer. (See page 38 for more information on using the remote with other devices.)

㉗ **Preset Up/Down:** When the tuner is in use, press these buttons to scroll through the stations programmed into the AVR 510's memory. When some source devices, such as CD players, VCRs and cassette decks, are selected using the device **Input Selectors** ❺, these buttons may function as Chapter Step or Track Advance.

㉘ **Clear Button:** Press this button to clear incorrect entries when using the remote to directly enter a radio station's frequency.

㉙ **Memory Button:** Press this button to enter a radio station into the AVR 510's preset memory. Once the **MEMORY** indicator U flashes, you have five seconds to enter a preset memory location using the **Numeric Keys** ⑱. (See page 31 for more information.)

㉚ **Delay/Prev Ch.:** Press this button to begin the process for setting the delay times used by the AVR 510 when processing surround sound. After pressing this button, the delay times are entered by pressing the **Set** button ⑯ and then using the ▲/▼ buttons ⑭ to change the setting. Press the **Set** button ⑯ again to complete the process. (See page 21 for more information.)

㉛ ▶ **Button:** Press this button to change a setting or selection when configuring many of the AVR 510's settings.

㉜ **Speaker Select:** Press this button to begin the process of configuring the AVR 510's bass management system for use with the type of speakers used in your system. Once the button has been pressed, use the ▲/▼ buttons ⑭ to select the channel you wish to set up. Press the **Set** button ⑯ and then select another channel to configure. When all adjustments have been completed, press the **Set** button ⑯ twice to exit the settings and return to normal operation. (See page 22 for more information.)

㉝ **Multiroom:** Press this button to activate the multiroom system or to begin the process of changing the input or volume level for the second zone. (See page 35 for more information on the multiroom system.)

㉞ **Volume Up/Down:** Press these buttons to raise or lower the system volume.

㉟ **TV/Video Button:** This button does not have a direct function on the AVR 510, but when used with a compatibly programmed VCR, DVD or satellite receiver that has a "TV/Video" function, pressing this button will switch between the output of the player or receiver and the external video input to that player. Consult the Owner's Manual for your specific player or receiver for the details of how it implements this function.

㊱ **SPL Indicator Select:** This button activates the AVR 510's EzSet function to quickly and accurately calibrate the AVR 510's output levels. Press and hold the button for three seconds and then release it. Note that the test tone will begin circulating, and the **Program/SPL Indicator** ❸ will change colors. During this sequence, EzSet will automatically adjust the output levels for all channels until they are equal, as shown by the **Program/SPL Indicator** lighting green for each channel. Press this button again when the adjustment is complete to turn off the test tone. (See page 23 for more information on EzSet.)

㊲ **6-Ch. Direct Input:** Press this button to select the component connected to the **6-Channel Direct Input** ❾ as the source.

㊳ **Mute:** Press this button to momentarily silence the AVR 510 or TV set being controlled, depending on which device has been selected. When the AVR 510 remote is being programmed to operate another device, this button is pressed with the **Input Selector** button ❺ to begin the programming process. (See page 36 for more information on programming the remote.)

㊴ **EzSet Sensor Microphone:** The sensor microphone for the EzSet microphone is behind these slots. When using the remote to calibrate speaker output levels using EzSet, be sure that you do not hold the remote in a way that covers these slots. (See page 23 for more information on using EzSet.)

㊵ **Light Button:** Press this button to activate the remote's backlight for ease of use in darkened rooms.

Troubleshooting Guide

SYMPTOM	CAUSE	SOLUTION
Unit does not function when Main Power Switch is pushed	• No AC Power	• Make certain AC power cord is plugged into a live outlet • Check to see whether outlet is switch-controlled
Display lights, but no sound or picture	• Intermittent input connections • **Mute** is on • Volume control is down	• Make certain that all input and speaker connections are secure • Press **Mute** button • Turn up volume control
Unit turns on, but front panel display does not light up	• Display brightness is turned off	• Follow the instructions in the Display Brightness section on page 33 so that the display is set to VFD FULL
No sound from any speaker; light around power switch is red	• Amplifier is in protection mode due to possible short • Amplifier is in protection mode due to internal problems	• Check speaker wire connections for shorts at receiver and speaker ends • Contact your local Harman Kardon service depot
No sound from surround or center speakers	• Incorrect surround mode • Input is monaural • Incorrect configuration • Stereo or Mono program material	• Select a mode other than Stereo • There is no surround information from mono sources • Check speaker mode configuration • The surround decoder may not create center- or rear-channel information from nonencoded programs
Unit does not respond to remote commands	• Weak batteries in remote • Wrong device selected • Remote sensor is obscured	• Change remote batteries • Press the AVR selector • Make certain front panel sensor is visible to remote or connect remote sensor
Intermittent buzzing in tuner	• Local interference	• Move unit or antenna away from computers, fluorescent lights, motors or other electrical appliances
Letters flash in the channel indicator display and digital audio stops	• Digital audio feed paused	• Resume play for DVD • Check that Digital Input is selected

Processor Reset

In the rare case where the unit's operation or the displays seem abnormal, the cause may involve the erratic operation of the system's memory or microprocessor.

To correct this problem, first unplug the unit from the AC wall outlet and wait at least three minutes. After the pause, reconnect the AC power cord and check the unit's operation. If the system still malfunctions, a system reset may clear the problem.

To clear the AVR 510's entire system memory including tuner presets, output level settings, delay times and speaker configuration data, first put the unit in Standby by pressing the **System Power Control** button 2. Next, press and hold the **Tone Mode** 6 and the **FM Mode Selector** 12 buttons for three seconds.

The unit will turn on automatically and display the RESET message in the **Main Information Display** Y. Note that once you have cleared the memory in this manner, it is necessary to reestablish all system configuration settings and tuner presets.

NOTE: Resetting the processor will erase any configuration settings you have made for speakers, output levels, surround modes, digital input assignments as well as the tuner presets. After a reset the unit will be returned to the factory presets, and all settings for these items must be reentered.

If the system is still operating incorrectly, there may have been an electronic discharge or severe AC line interference that has corrupted the memory or microprocessor.

If these steps do not solve the problem, consult an authorized Harman Kardon service depot.

AVR110/210/310/510 IDLE CURRENT ADJUSTMENT:

Turn main power on; let unit idle (no load) for 5 minutes.

Check points: White female connectors: WA401,WA402,WA403,WA601,WA602

Adjust – Variable resistors: VR401,VR402,VR501,VR601,VR602

to **21mV +/- 3mV.**

Use caution not to short the two pins together in each connector.

After 5 min. more check again, and re-adjust if necessary.

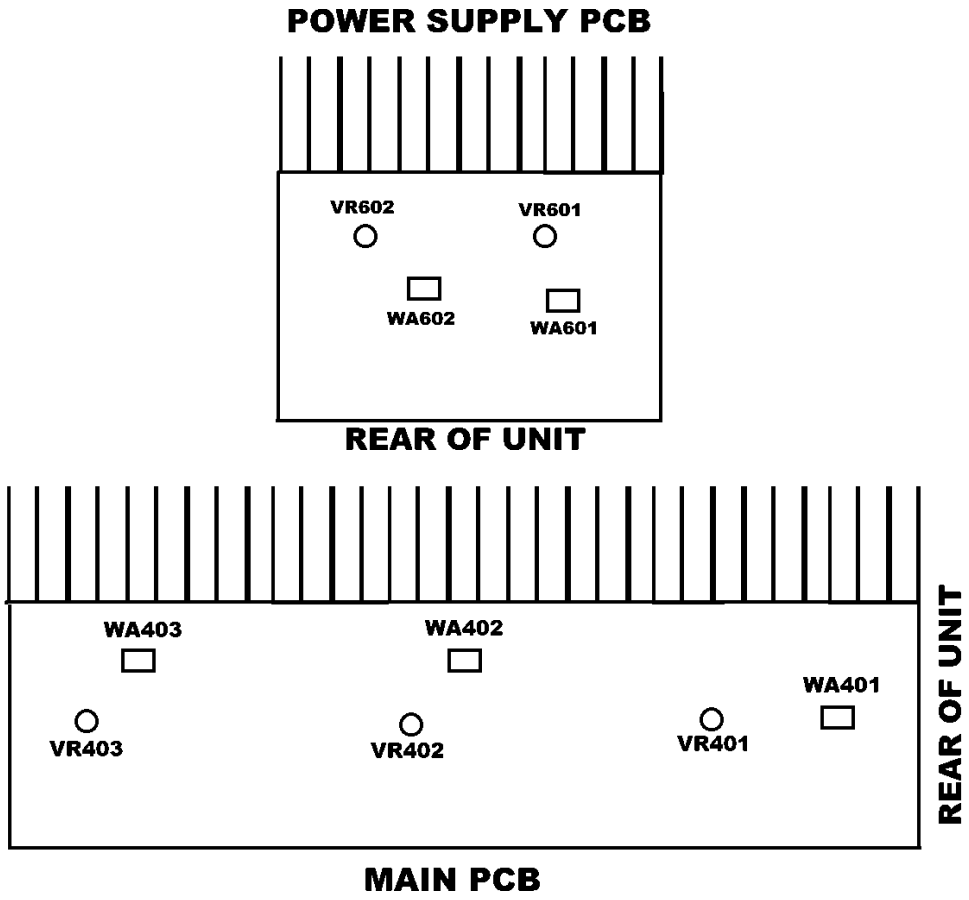

AVR110/210/310/510 TUNER ALIGNMENT

There is no tuner alignment possible on the AVR110/210/310/510 series. In the event of a misalignment or problem, traced to the Tuner PCB, order complete PCB below:

AVR110/210/310/510 (120V)	Part# J4099100170X

AVR510 harman/kardon

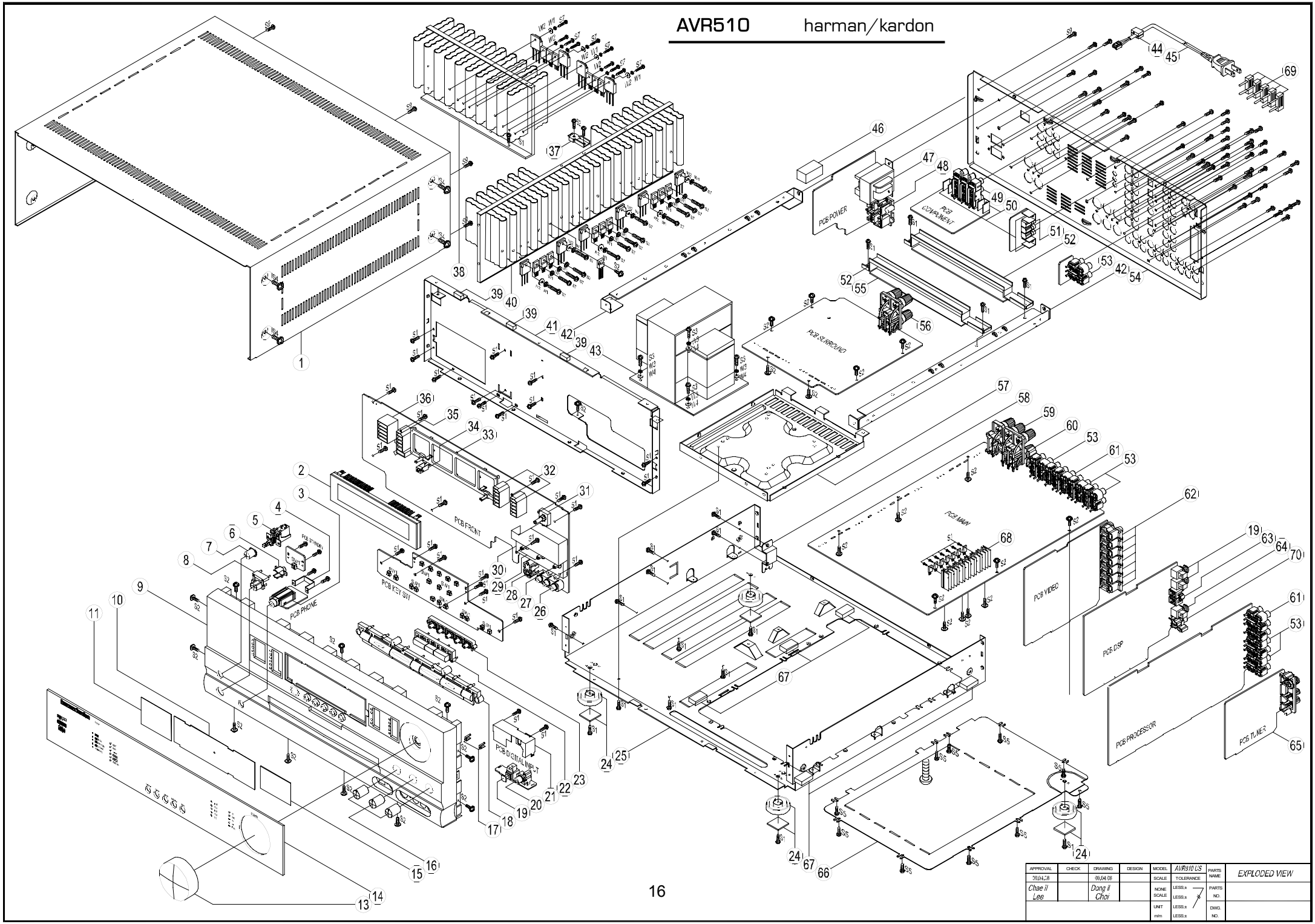

APPROVAL	CHECK	DRAWING	DESIGN	MODEL	AVR510 US	PARTS NAME	EXPLODED VIEW
00.04.28		00.04.08		SCALE	TOLERANCE		
Chae il Lee		Dong il Choi		NONE SCALE	LESS:± LESS:±	PARTS NO.	
				UNIT mm	LESS:± LESS:±	DWG. NO.	

AVR 510 EXPLODED VIEW PART LIST

NO	PARTS CODE	PARTS NAME	Q'TY	MATERIAL & SPEC
1	J60100008000	COVER TOP	1	SECC+VCM
2	J2352230020X	VFD SAMSUNG	1	HNA-16LL15
3	J44329000102	JACK PHONE KUNMING	1	HTJ-064-07BG
4	J60300002000	BKT PHONE	1	SECC 1.0t
5	J60300002000	SW PUSH POWER TV-3	1	SDDLB1470D
6	J85400019000	INDICATOR STANDBY	1	SAN
7	J85200049000	BUTTON POWER	1	HIPS 94HB
8	J85200052000	BTN STANDBY	1	HIPS 94HB
9	J8500017200	PANEL FRONT	1	HIPS 94HB
10	J85500004000	FILTER DISPLAY ACRYL 0.5t	1	R2117
11	J85940009000	DIFFUSER	1	PET 713F
12				
13	J85100022000	KNOB MAIN	1	HIPS 94HB
14	J85300020101	WINDOW DISPLAY W/BADGE	1	MITHUBISHI 530
15	J85940002000	DIFFUSER	1	PET 713F
16	J85100009000	KNOB TONE	3	HIPS 94HB
17	J85400020000	INDICATOR VIDEO 4	2	SAN
18	J85200093000	BTN 7 KEY	1	HIPS 94HB
19	J2123806001X	FIBER OPTICAL MODULE	3	
20	J44301000600	JACK RCA 1P 0 GOLD	1	JE010003MG
21	J60600015000	SHIELD DIGITAL	1	ET 0.5t
22	J85200092000	BTN 5 KEY	1	HIPS 94HB
23	J85200091000	BTN 3 KEY	1	HIPS 94HB
24	J85900501000	A'SSY FOOT	4	ABS+TPR
25	J60000010000	CH MAIN	1	SECC 1.0t
26	J44303000100	JACK RCA 3P YWR DAERYUNG	1	JK03000B1C
27	J32214000101	VR BALANCE J/ALPS	1	RK14K12400BQ
28	J44311000100	JACK S-VIDEO DAERYUNG	1	C40160261N
29	J32214000201	VR TONE J/ALPS	2	RK14K12400BR
30	J60600006000	SHIELD FRONT TONE	1	ET 0.5t
31	J32616100001	ENCODER /ALPS	1	EC16B24204
32	J85940003000	REFLECTOR 3	2	HIPS 94HB
33	J85810009000	FL GUIDE	1	HIPS 94HB
34	J2411320014X	REMOTE SENSOR	1	RPM 6938-
35	J85940008000	REFLECTOR 6	1	HIPS 94HB
36	J85940001000	REFLECTOR 1	1	HIPS 94HB
37	J60300502100	BKT HEATSINK	1	SECC 1.0t
38	J60500010000	HEATSINK SURROUND	1	AL 6063-T5
39	J97200505000	CUSHION EMI	3	
40	J60500009000	HEATSINK MAIN	1	AL 6063-T5
41	J60020003200	CH FRONT	1	SECC 1.0t
42	J60200012000	FRAME GUIDE	1	SECC 1.0t
43	J2802210201X	POWER TRANS	1	
44	J65100000100	BUSHING AC CORD	1	
45	J43730100100	CORD AC POWER	1	UL SPT II
46	J97200502000	CUSHION SPONGE	1	
47	J2812220012X	TRANS STANDBY	1	
48	J44900000110	AC OUTLET	1	A204D0043P
49	J44309000000	JACK RCA 9P RUGRUGRUG	1	JK09012ZLN
50	J60300028000	BKT GROUND	4	ET 0.5t

55175780 55181270

NO	PARTS CODE	PARTS NAME	Q'TY	MATERIAL & SPEC
51	J44333000001	JACK STEREO 1P	3	JW-350S
52	J60300501000	BKT PCB	2	SECC 1.0t
53	J44302401201	JACK RCA 4P WWRR	6	JW4104RS
54	J60110009000	PANEL REAR	1	SECC 1.0t
55	J97200503000	CUSHION BKT 11X45X2t	2	EVA
56	J44001400000	TERMINAL SCREW 4P	1	SH04103373P
57	J60120502000	TRANS BOTTOM	1	SECC 1.0t
58	J60300504000	BKT PROTECTION	1	SECC 1.0t
59	J44001600000	TERMINAL SCREW 6P	1	SH0611701P
60	J44301000300	JACK RCA 1P B	1	JE010003PN
61	J44306000101	JACK RCA 6P WWWRRR JW	6	JW-4105RSS
62	J44312000100	JACK RCA+S-VIDEO YB	7	C50160310N
63	J44302001100	JACK RCA 2P OO DAERYUNG	1	JC0200098N
64	J2123806002X	FIBER OPTICAL MODULE	1	
65	J4099100150X	ASS'Y TUNER MODULE	1	
66	J60120501100	COVER BOTTOM	1	SECC 1.0t
67	J97200501000	CUSHION(B) 30X30X10	5	EVA
68	J60530002100	HEATSINK 118X20X60H	1	AL 6063-T5
69	J94100001000	JUMPER PLUG	5	
70	J44301000700	JACK RCA 1P ORANGE	1	JE010003MN
71				
72				
73				
74				
75				

55244110

NO	PARTS CODE	PARTS NAME
W1	5541-001-010	WASHER SPRING NO:2 M3 MC
W2	5541-001-020	WASHER FLAT P/W 3.3X8.0X0.5 MC
W3	5541-001-030	WASHER SPRING NO:2 M4 MC
W4	5541-001-040	WASHER FLAT P/W 4.7X1.2X1 MC

NO	PARTS CODE	PARTS NAME
S1	J5636140010X	SCREW A123010002 BTTB 3X10B
S2	J5636140040X	SCREW A183008000 BTTN W3X8Y
S3	J5636140080X	SCREW A124008000 BTTB 4X8Y
S4	J5636140150X	SCREW A180400802 #2 WPT 4X8B
S5	XXXXXX	SCREW 3X6B
S6		
S7	J5636140030X	SCREW A113016000,BTTB 3X16Y
S8		
S9	J90720301080	SCREW 3X10B BLACK TEETH

NO	PARTS CODE	PARTS NAME
SW1	J46500500501	SW TACT 2P SKQNAE 160gf

harman/kardon Service Bulletin

Service bulletin # H/K2001-01 June 2001 Warranty labor rate: MINOR repair

To: All harman/kardon Service Centers

Models: AVR110/210/310/510, AVR3000/4000/5000

Subject: Unit Goes into Protection

In the event you receive an AVR110,210,310,510,3000,4000 or 5000 A/V receiver with the complaint: "The Receiver is going into protection (Red indicator in the power switch) as soon as it's turned on, or after a short delay", check both items below for possible solutions:

AVR/210/310/510, AVR3000/4000

1. **Possible bad solder connection at jumper JW-38 on main PCB:**
   a) Disconnect all external cables, lay unit on its left side on a padded surface.
   b) Remove the (10) Phillips screws holding the bottom chassis grille on, exposing the Main PCB.
   c) Refer to the illustration below; locate area of concern and resolder exposed ends of jumper JW-38 if needed.
   d) Reassemble and test unit.

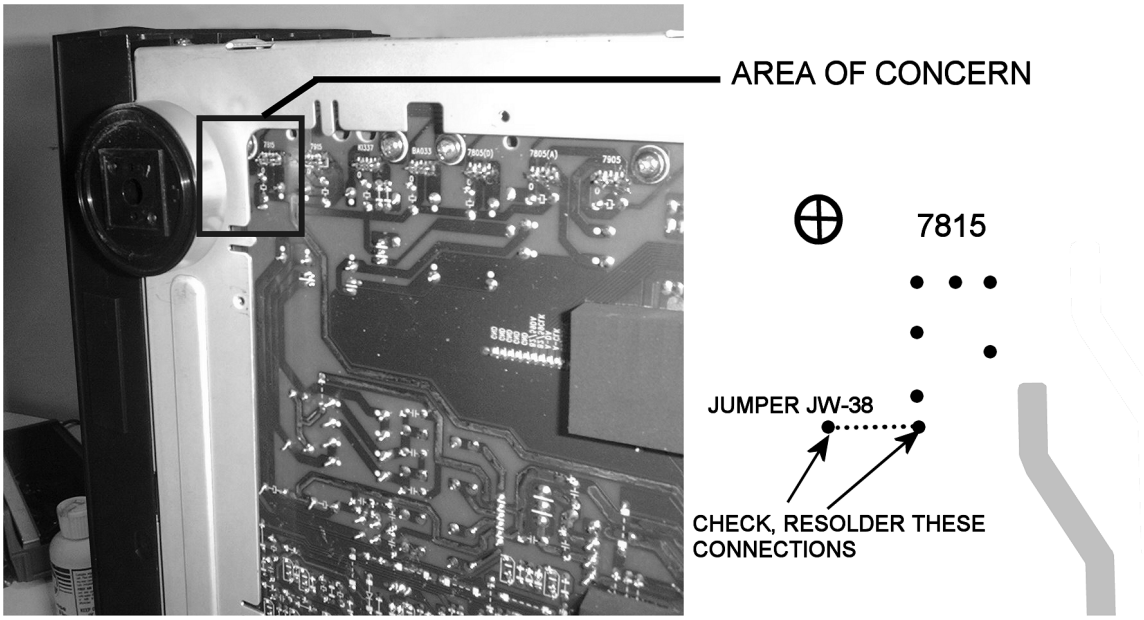

Model	Serial Number 120V	Serial Number 230V RDS	STATUS	ACTION
AVR210	TH0015~01001 to TH0015~02966	n/a	Check jumper JW-38 for solder	Resolder JW-38 if needed
AVR310	TH0016~01001 to TH0016~04408	n/a	Check jumper JW-38 for solder	Resolder JW-38 if needed
AVR510	TH0017~01001 to TH0017~04403	n/a	Check jumper JW-38 for solder	Resolder JW-38 if needed
AVR3000	n/a	TH0019~01001 to TH0019~03369	Check jumper JW-38 for solder	Resolder JW-38 if needed
AVR4000	n/a	TH0020~01001 to TH0020~03423	Check jumper JW-38 for solder	Resolder JW-38 if needed

AVR110/210/310/510, AVR3000/4000/5000

2. Possible blown line fuse; inspect and replace if necessary: When line fuse FU981 is blown in the AVR series, the Amber Standby Indicator will still light, but when unit is switched ON, the unit will go into protection. (Red indicator)

a) Remove (14) Phillips screws holding the top cover to the receiver; remove the cover.
b) Line fuse FU981 is located at the rear, on the vertically mounted Standby PCB close to the connector where the main AC power cord enters the receiver. Long-nosed pliers or similar tool may be used to remove it. Connectors nearby it may have to be unplugged to access the fuse.
c) See chart below for proper replacement fuse:

MODEL	DESCRIPTION	H/K PART#
AVR110/210	5A Slo-Blo 5x20mm 125V	J5502250320X
AVR310	6.3A Slo-Blo 5x20mm 125V	A091-0013-0
AVR510	7A Slo-Blo 5x20mm 125V	J5502270320X
AVR3000	2.5A Slo-Blo 5x20mm 250V	G65025225114
AVR4000	3.15A Slo-Blo 5x20mm 250V	J5503331330X
AVR5000	4A Slo-Blo 5x20mm 250V	J5502240320X

d) Replace any connectors that were disconnected, replace the top cover; test the unit

NOTE: If line fuse FU981 blows again after a short period, with no speaker loads connected, problem is another, more serious issue not covered in this bulletin.

harman/kardon Service Bulletin

Service bulletin # H/K2001-03 Rev1 January 2003 Warranty labor rate: MAJOR repair

To: All harman/kardon Service Centers

Models: AVR110/210/310/510

Subject: No Output In Surround Mode

In the event you receive an AVR110,210,310, or 510 A/V receiver with the complaint: "The receiver has no output when any surround mode is chosen, when using any input, digital or analog.", check the item below for a possible solution:

Probable Cause: Defective IC4 EEPROM AT27LV020 on the DSP board.

Solution: Replace IC4 (called IC04 in the parts list) following these instructions:

1) Remove the top cover, (14) Black Phillips screws at the sides and rear of the unit.
2) Locate the DSP PC Board; Figure 1. Remove the metal brace at the top of the unit.
3) Pull the white 21 conductor ribbon cable at the rear of the DSP PC Board straight out of its receptacle.
4) Unplug the multicolor 5 conductor molex cable at the top of the DSP PC Board.
5) Remove the (33) black Phillips screws on the left side of the rear backplate; see Figure 2. Do not remove any additional screws on the right side. Remove all three black plastic plugs that cover the optical inputs at the rear of the DSP PC Board.
6) Pull on the left side of the rear backplate, away from the receiver chassis; you should be able to pull it away enough to allow the DSP PC Board to be pulled straight up and out of the receiver. If necessary, cut any additional cable ties that would prevent removal of the DSP board.
7) Replace IC4 (called IC04 in the parts list); obtain part number from chart below. Caution: IC4 is an electrostatically sensitive device and can be damaged by careless handling; you must follow proper static control procedures to prevent damage to the IC.
8) Replace DSP PC Board and follow the above procedures in reverse order. Screws: If using a power tool, use care and minimum effort to avoid damaging the various plastic receptacles.
9) Test unit to assure original problem has been corrected.

AVR110	IC4 or IC04	h/k part# 55172540AVR110
AVR210	IC4 or IC04	h/k part# 55172540AVR210
AVR310	IC4 or IC04	h/k part# 55172540AVR310
AVR510	IC4 or IC04	h/k part# 55172540AVR510

FIGURE 1

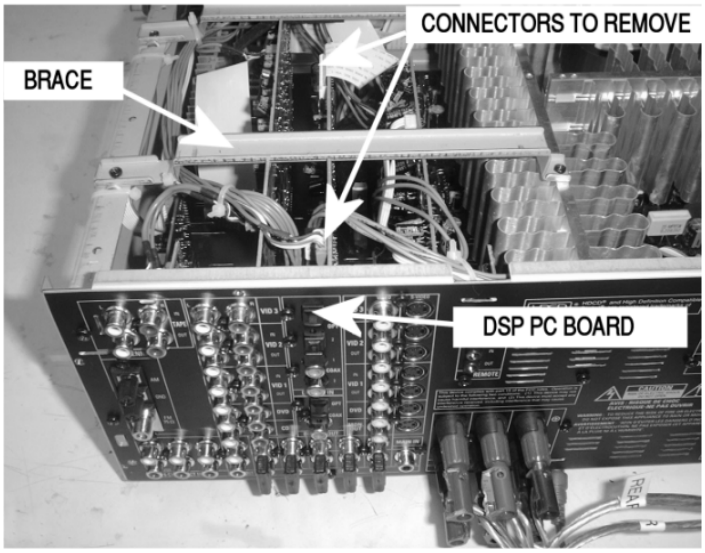

FIGURE 2
REMOVE ALL PHILLIPS SCREWS ON THIS SIDE OF THE RECEIVER

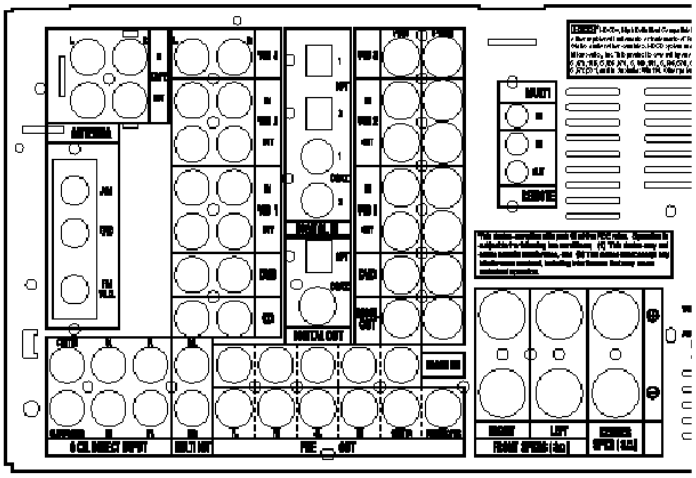

harman/kardon Service Bulletin

Service bulletin # H/K2003-02 January 2002

Warranty labor rate: MINOR repair

To: All harman/kardon Service Centers

Model: AVR310, AVR510

Subject: Hum

In the event you receive an AVR310 or AVR510 with the complaint of Hum in all channels (speaker output), check and replace C487 (6800U 16V) in the regulated power supply on the main PCB.

Procedure:

1) Remove the top cover (14 Phillips screws)
2) Turn the unit on its side and remove the bottom grille (10 Phillips screws).
3) Locate and replace C487, (6800U 16V) The capacitor is located in the power supply section in the front right quadrant of the main PCB. Replace only with h/k part number 647-UVZ1C682MHH. (***DO NOT*** *replace with original capacitor h/k part number J3420668236X*).
4) Replace the bottom grille, top cover, and test the unit.

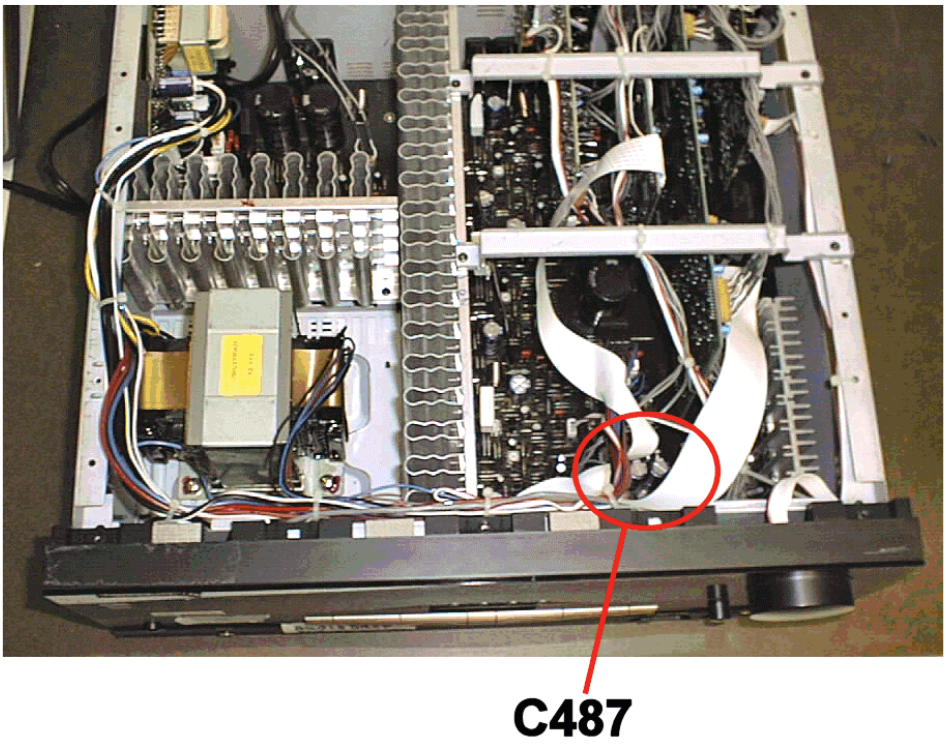

MODELS	SERIAL NUMBER 120V	STATUS	ACTION
AVR310 AVR510	All serial numbers affected	C487 may be defective	Replace C487

harman/kardon Service Bulletin

Service bulletin # H/K2003-07 Sept. 2003

Warranty labor rate: MINOR repair

To: All harman/kardon Service Centers

Model: AVR110/210/310/510, AVR120/220; AVR320/520

Subject: Various Complaints

For Complaints:

NO AUDIO
NOISE
INTERMITTENT NOISE
INTERMITENT AUDIO

Possible Solution:

Voltages may be too high on DSP Buffer IC or DSP IC

All modifications are done to the DSP board.

AVR110/210/310/510
AVR120/220

Remove BD5 and replace with two 1N4148 diodes in series.
Remove R43 and R90 (3.3Ω) and replace each with a 1N4148 diode.
(See diagram Page 2 for location and polarity)

AVR320/520

Remove BD25 and replace with two 1N4148 diodes in series.
(See diagram Page 2 for location and polarity)

In all cases the 1N4148 diode(s) you need to add should be normal 2-lead axial components, like h/k part# 13-0482 or equivalent (not SMD devices).

MODELS: AVR110/210/310/510
AVR120/220

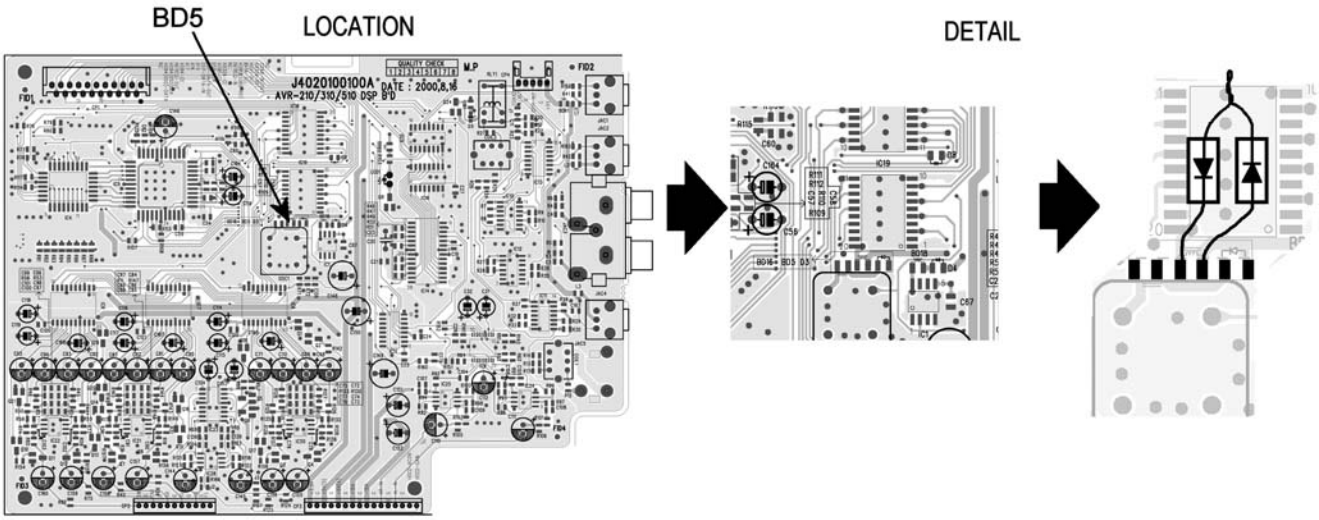

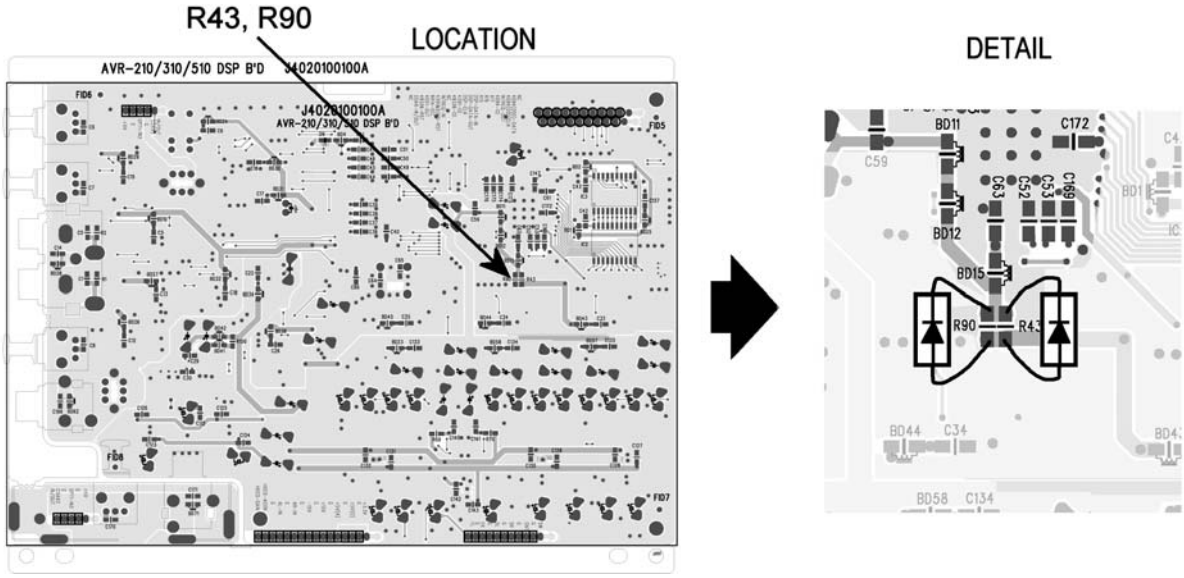

MODELS: AVR320/520

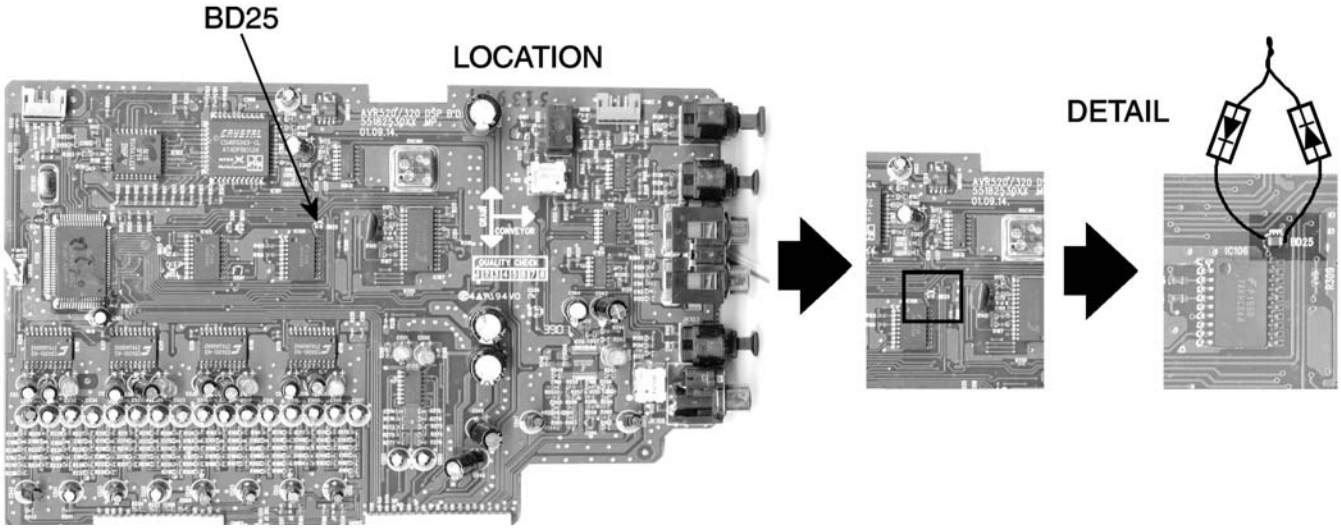

harman/kardon TECH TIPS

Troubleshooting tips and solutions to common service problems

AVR Test Cable Kit Now Available

For models: AVR35/45/65
AVR100/200/300/500/7000
AVR110/210/310/510
AVR120/220/320/520

TIP# HKTT2002-01

Complaint:

The components on many of these PCB's can't be accessed with a test probe or other device because the boards are mounted so close together. If the board is physically removed, signal & power to the board is lost and the board/component cannot be tested.

Solution:

Order h/k extension cable kit #AVR-CABLEASSYII. This kit, consisting of various ribbon cable assemblies, will allow you to extend the connectors so any PCB can be removed from the unit and still be "live".

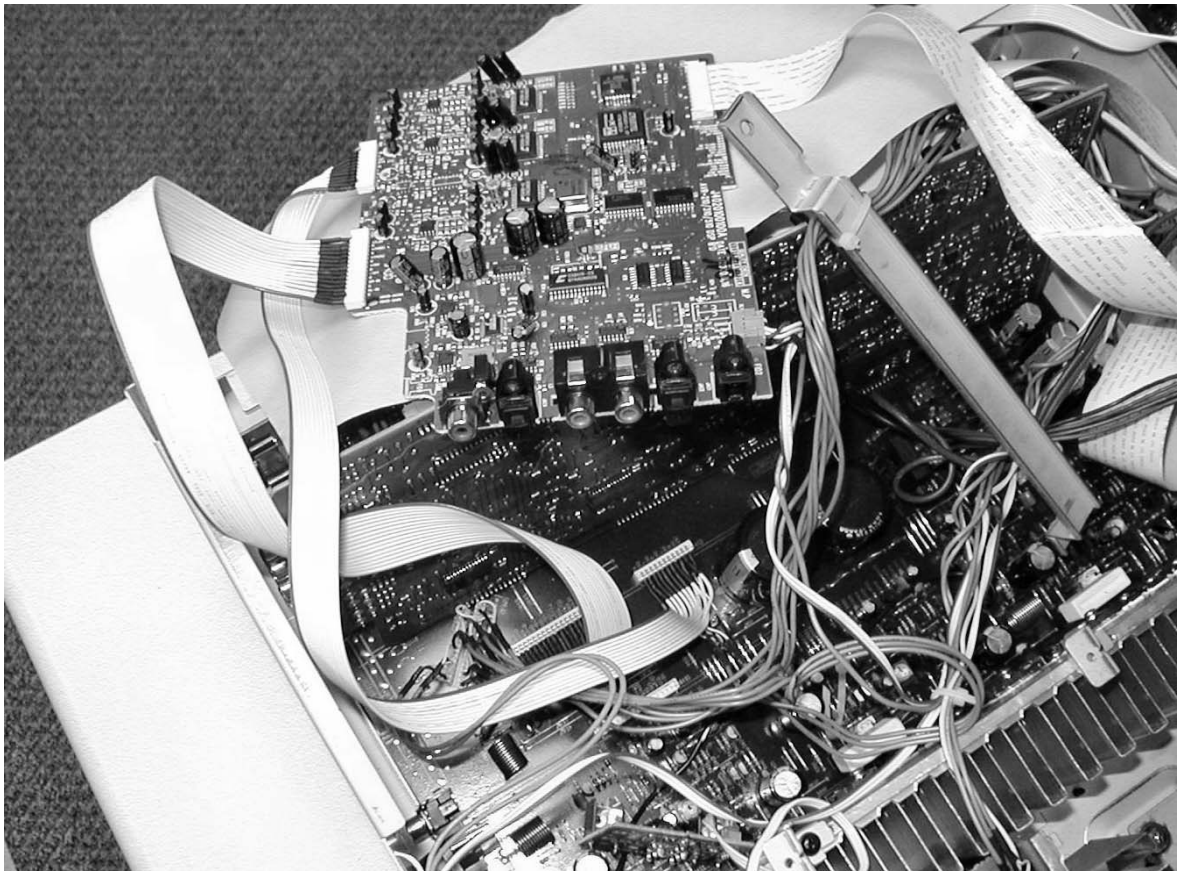

Kit includes:

Qty. in bag	Conductors	Comment
5	2	3 pin connector but only 2 wires
6	3	
2	4	
2	5	
2	6	
6	7	
2	8	
2	9	
2	10	
6	11	
1	12	
1	14	
4	15	
1	16	
1	17	
4	19	
1	21	Split connector male/female *
1	22	Split connector male/female *
1	27	Split connector male/female *
1	29	Split connector male/female *
1	30	Split connector male/female *
1	31	Split connector male/female *

* Connectors are wired together side-by-side to equal the higher pin counts

harman/kardon TECH TIPS

Troubleshooting tips and solutions to common service problems

For models: **TIP# HKTT2003-01 Rev5**

AVR7000/7200/7300/8000
AVR100/200/300/500
AVR110/210/310/510
AVR120/220/320/520
AVR125/225/325/525
AVR130/230/330/430/630
AVR135/235/335/435/635
AVR10
DPR1001
DPR1005
DPR2005
HK3370/3470/3375/3475
HK3250

Subject: Backup Memory on AVR/DPR/HK series receivers

In the event of the complaint: "the receiver is losing its memory (any programmed system settings) when the unit is turned off, or after the unit is unplugged (briefly*)":

Check and replace:

Model	Designator	Location	Description	Part number
AVR10	C712 D709	Front PCB	0.047 Farad 5.5v capacitor and 1N4148 diode	#3439247315 #2058322101
AVR7000	C730	Front PCB	0.047 Farad 5.5v capacitor	# P10790-ND or # J3432147324X
AVR7200	C106	Front PCB	0.047 Farad 5.5v capacitor	# P10790-ND
AVR7300	C657	DSP PCB	0.047 Farad 5.5v capacitor	# H01-CEZXA0479MN-5
AVR8000	C726	Front PCB	0.047 Farad 5.5v capacitor	# 55230310NR or # P10790-ND
AVR100/200	C412	Front PCB	0.047 Farad 5.5v capacitor	# CEGT-B473J-0J0
AVR300	C906	Front PCB	0.1Farad 5.5v capacitor	# J4433210421X or # P10791-ND
AVR500	C906	Front PCB	0.1Farad 5.5v capacitor	# J4433210421X or # P10791-ND
AVR110/210/310/510 AVR120/220/320/520	C216	Front PCB	0.047 Farad 5.5v capacitor	# P10790-ND
AVR125/225	C734,C885	Front PCB	two 0.1F capacitors in parallel	# BCESOHD104
AVR325/525	C106	Front PCB	0.047 Farad 5.5v capacitor	# P10790-ND
AVR130/230/330	BAT1	Front PCB	3.6v Battery	# HABGP40BVH3A3H
AVR135/235/335	BAT1	Front PCB	3.6v Battery	# HGP15BNH3A3H
AVR430/630	C657	DSP PCB	0.047 Farad 5.5v capacitor	# CEZXA0479MN-5
AVR435/635	C557	DSP PCB	0.047 Farad 5.5v capacitor	# H03-CEZXA0479MN-0
DPR1001	BC601	Main PCB	0.1Farad 5.5v capacitor	# CEGT-B104J-0J0
DPR1005/2005	C437	Processor PCB	0.047 Farad 5.5v capacitor	# CEZXA0479MN-5
HK3370/3470	C301	Front PCB	0.1Farad 5.5v capacitor	# CEGT-B104J-0J0
HK3375/3475	C301	Front PCB	0.1Farad 5.5v capacitor	# CEGT-B104J-0J0
HK3250	C712 D709	Front PCB	0.047 Farad 5.5v capacitor and 1N4148 diode	#3439247315 #2058322101

* After approximately two weeks of being disconnected from AC supply, even a normally functioning receiver may lose any programmed settings and switch to default settings. (Four weeks for the DPR1005 & 2005)

BLOCK DIAGRAM MODEL: AVR110/210/310/510 AVR2000/3000/4000/5000

NO	DATE	POS.	CONTENTS	NO	DATE	POS.	CONTENTS

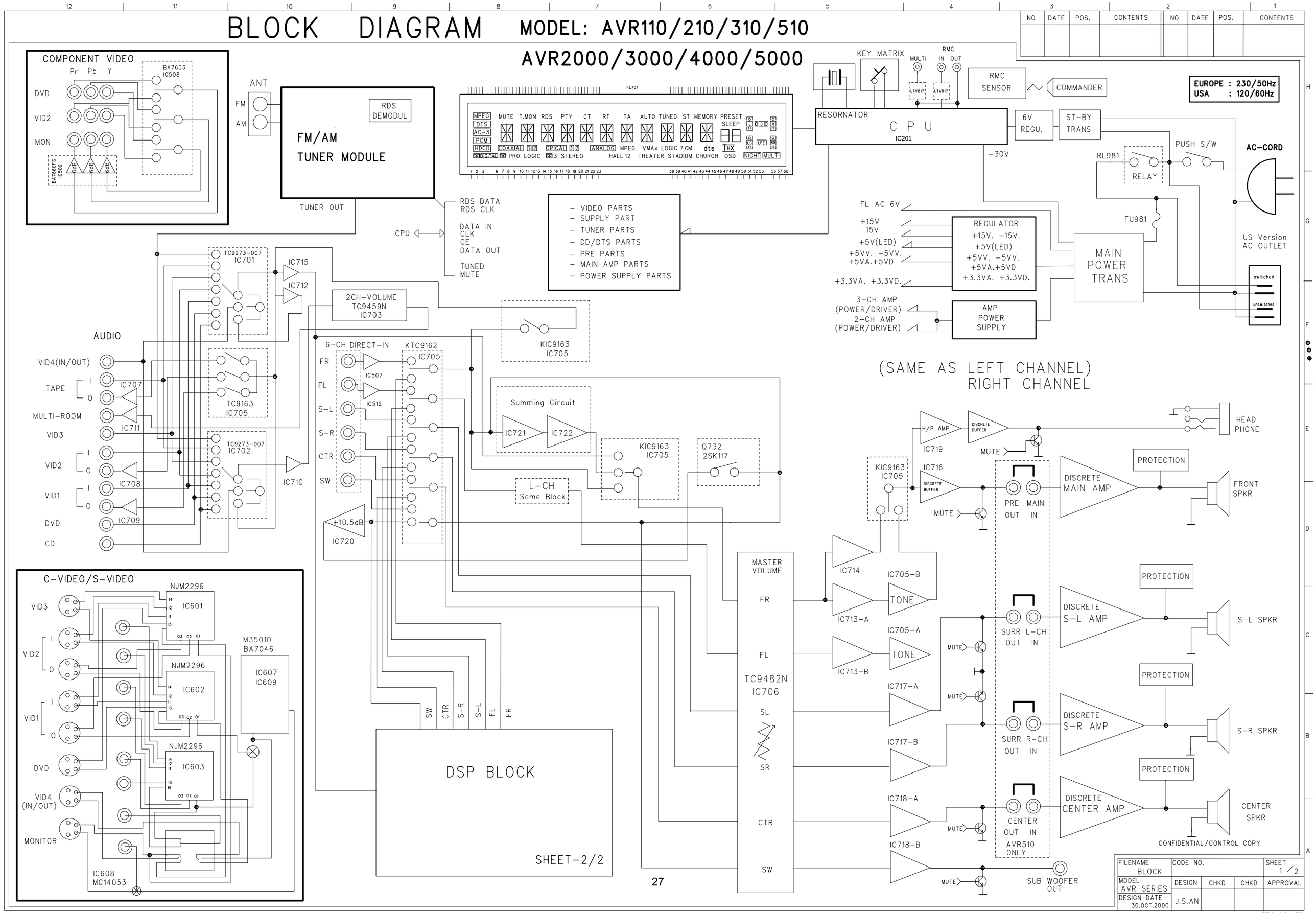

NO	DATE	POS.	CONTENTS	NO	DATE	POS.	CONTENTS

BLOCK DIAGRAM

MODEL 110/210/310/510
2000/3000/4000/5000

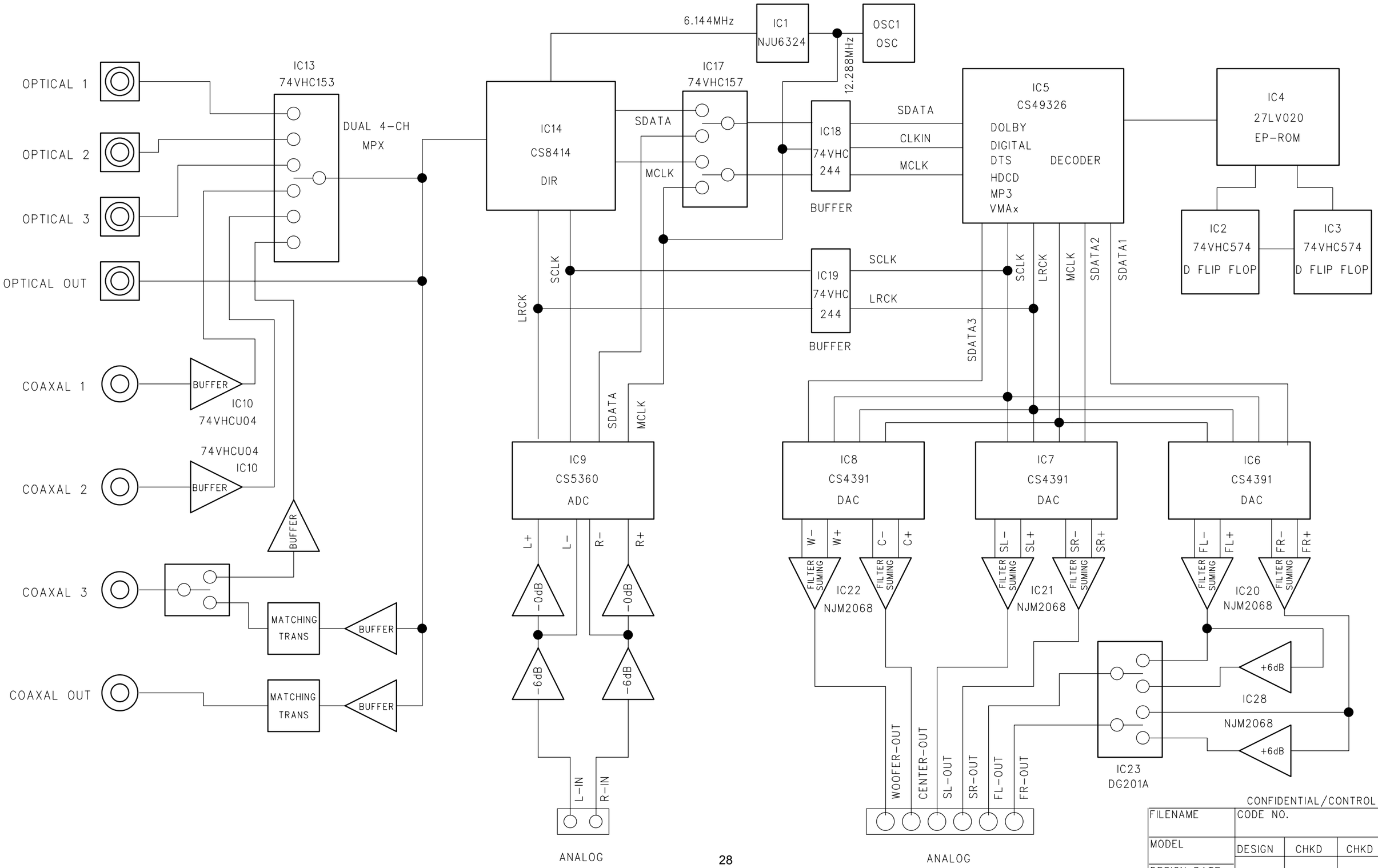

CONFIDENTIAL/CONTROL COPY

FILENAME	CODE NO.			SHEET /
MODEL	DESIGN	CHKD	CHKD	APPROVAL
DESIGN DATE				

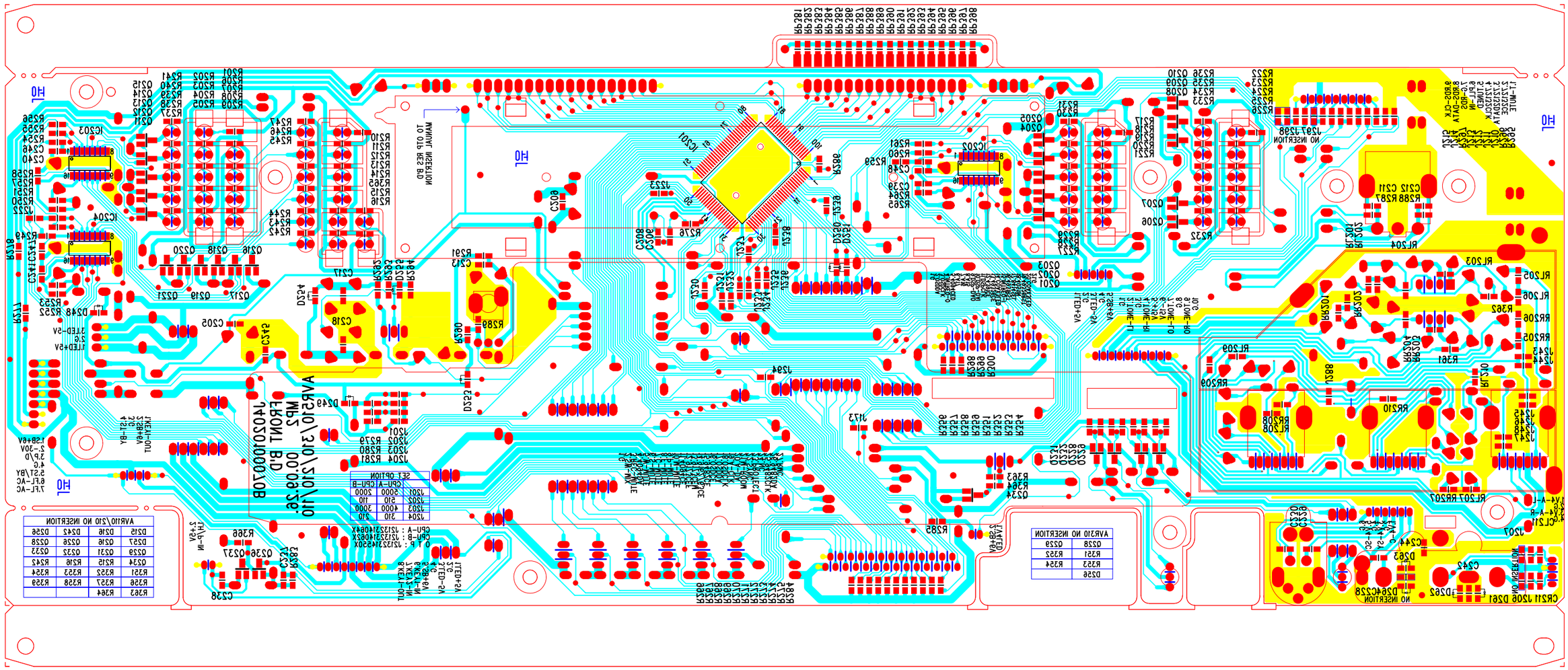
AVR510/210 FRONT B'D
MP2 00.09.26.
J4020100070B
SET OPTION
CPU-A CPU-B
J201 2000 2000
J202 510 110
J203 4000 3000
J204 510 210
AVR510/210 NO INSERTION
J201 J298
NO INSERTION
AVR510 NO INSERTION
NO INSERTION

M.P DATE : 2000,8,16 CONVEYER GRAIN J4020100100A AVR-210/310/510 DSP B'D

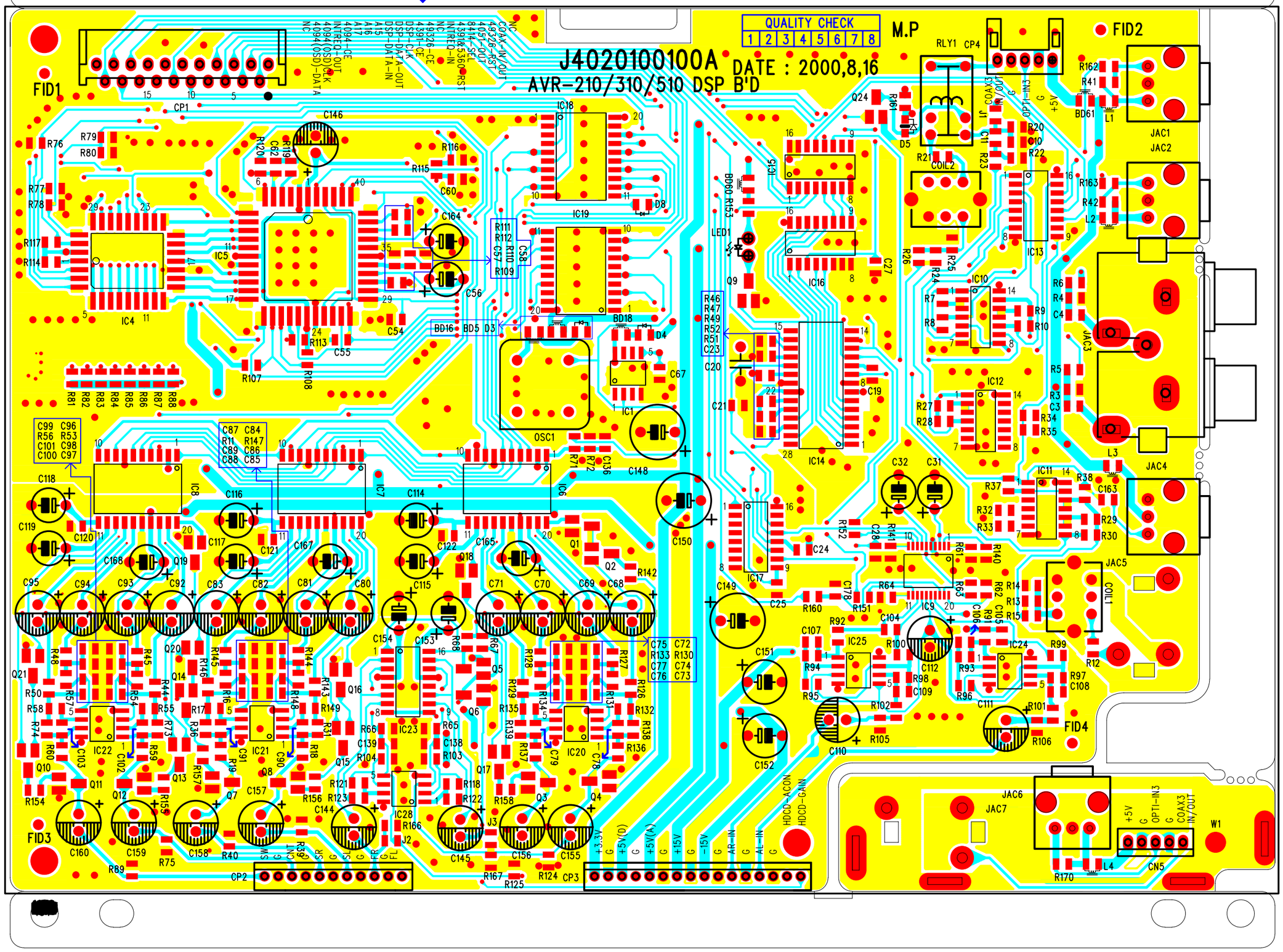

510_DSP-FTMS-MP-1.pcb - Tue Feb 13 20:18:59 2001

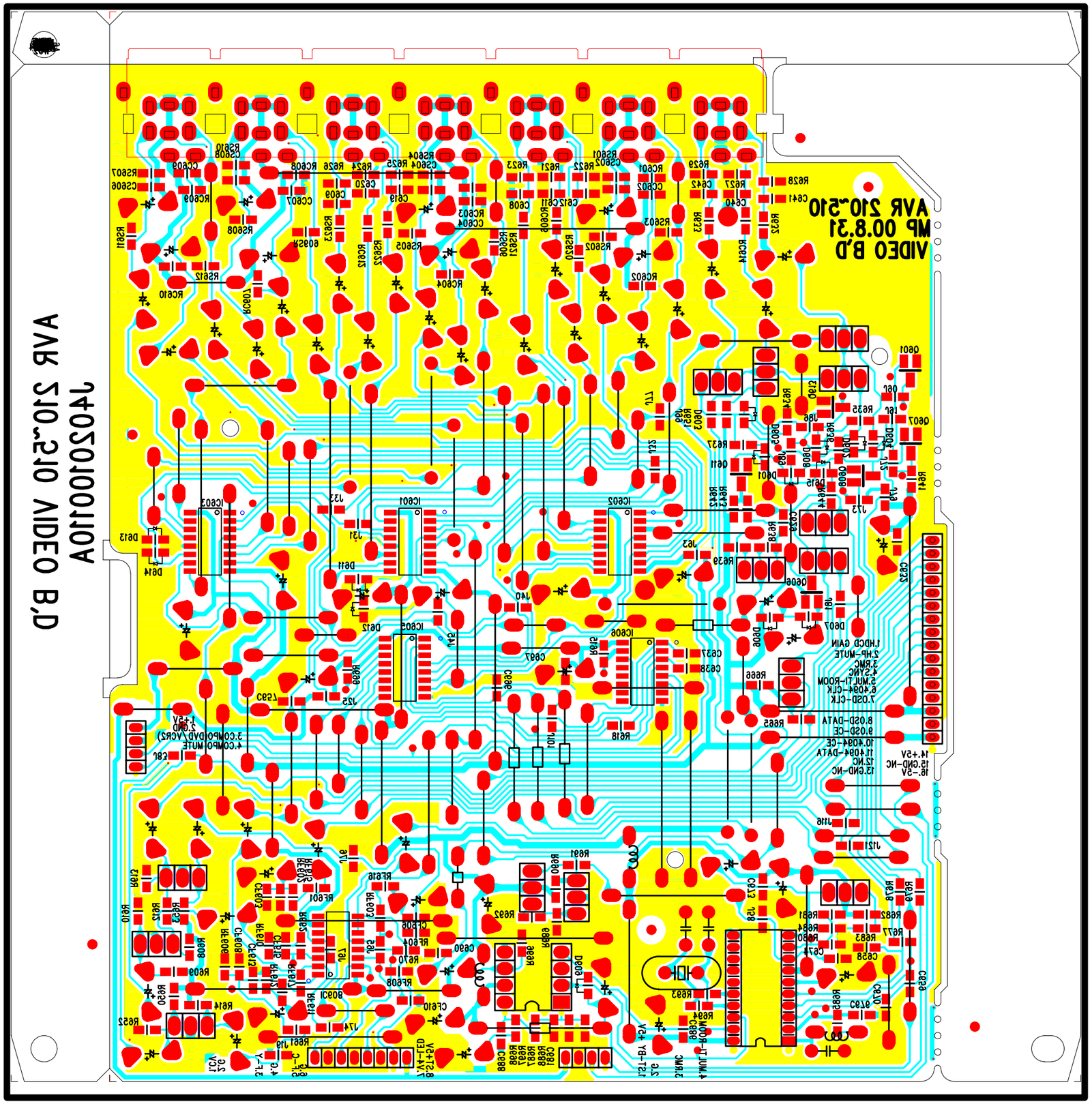
AVR 210~510
VIDEO B'D
MP 00.8.31
AVR 210~510
J4020100-0A
VIDEO B'D

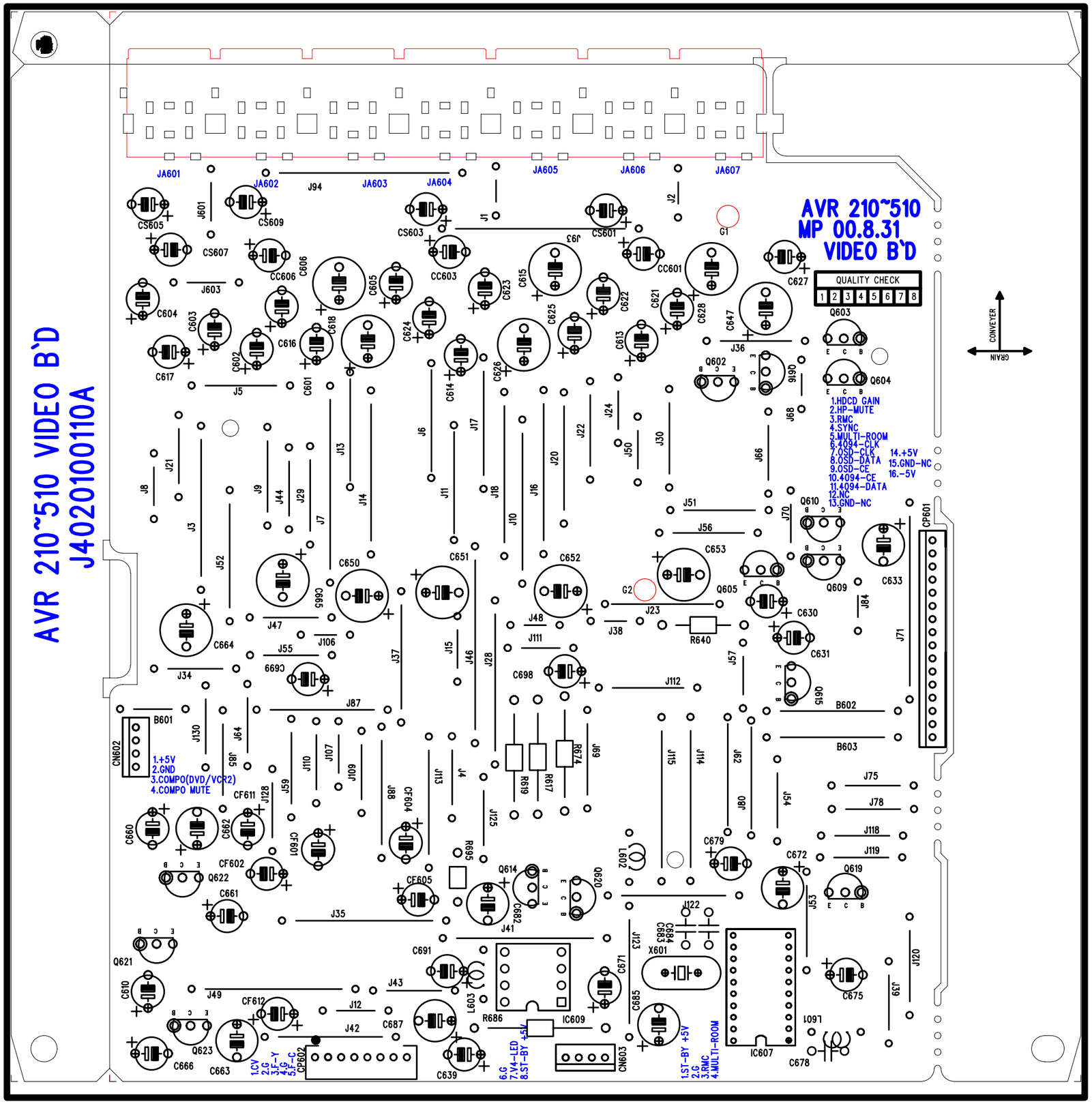
AVR 210~510 VIDEO B`D
J402010110A
AVR 210~510
MP 00.8.31
VIDEO B`D
QUALITY CHECK
1 2 3 4 5 6 7 8
CONVEYER
GRAIN
1.HDCD GAIN
2.HP-MUTE
3.RMC
4.SYNC
5.MULTI-ROOM
6.4094-CLK
7.OSD-CLK
8.OSD-DATA
9.OSD-CE
10.4094-CE
11.4094-DATA
12.NC
13.GND-NC
14.+5V
15.GND-NC
16.-5V
1.+5V
2.GND
3.COMPO(DVD/VCR2)
4.COMPO MUTE
1.CV
2.G
3.F-Y
4.G
5.F-C
6.G
7.V4-LED
8.ST-BY +5V
1.ST-BY +5V
2.G
3.RMC
4.MULTI-ROOM

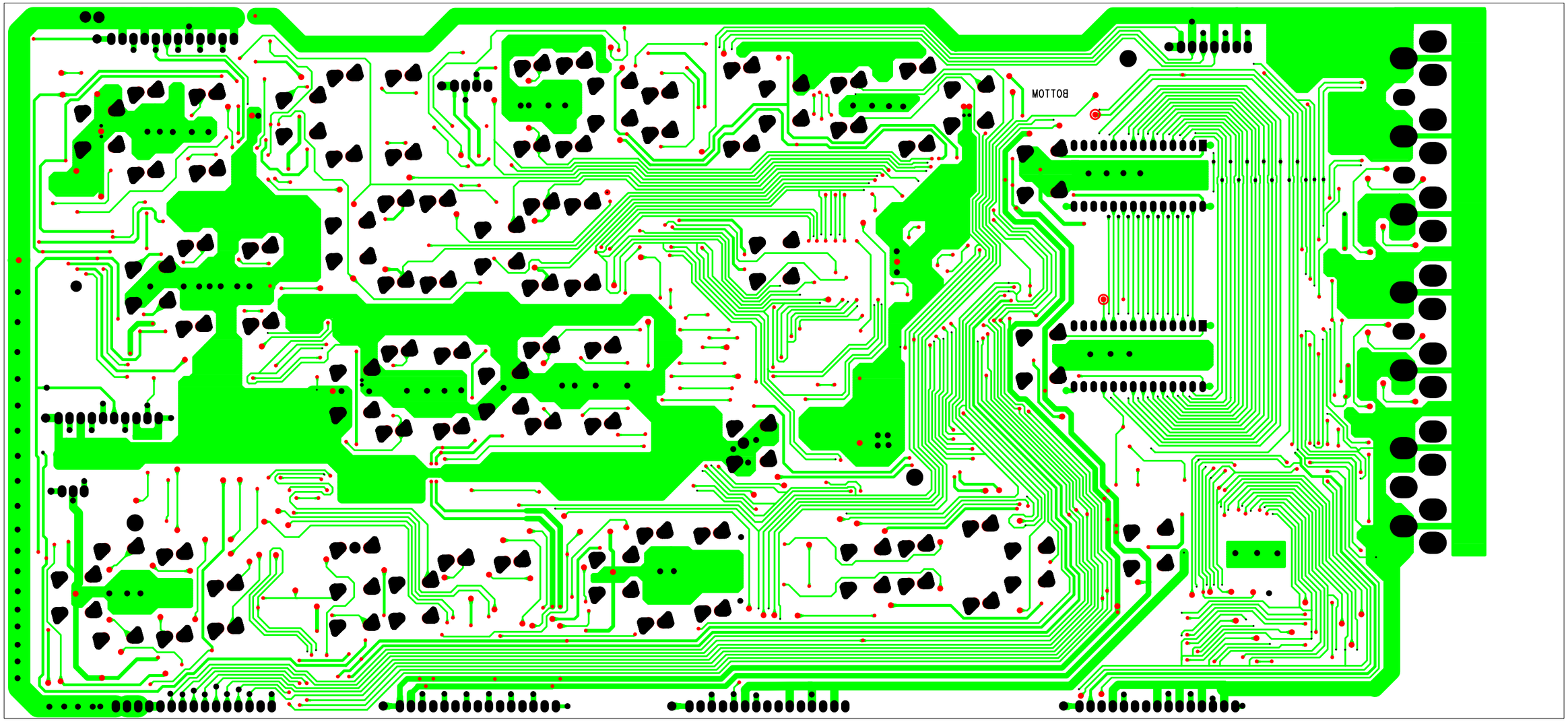
BOTTOM

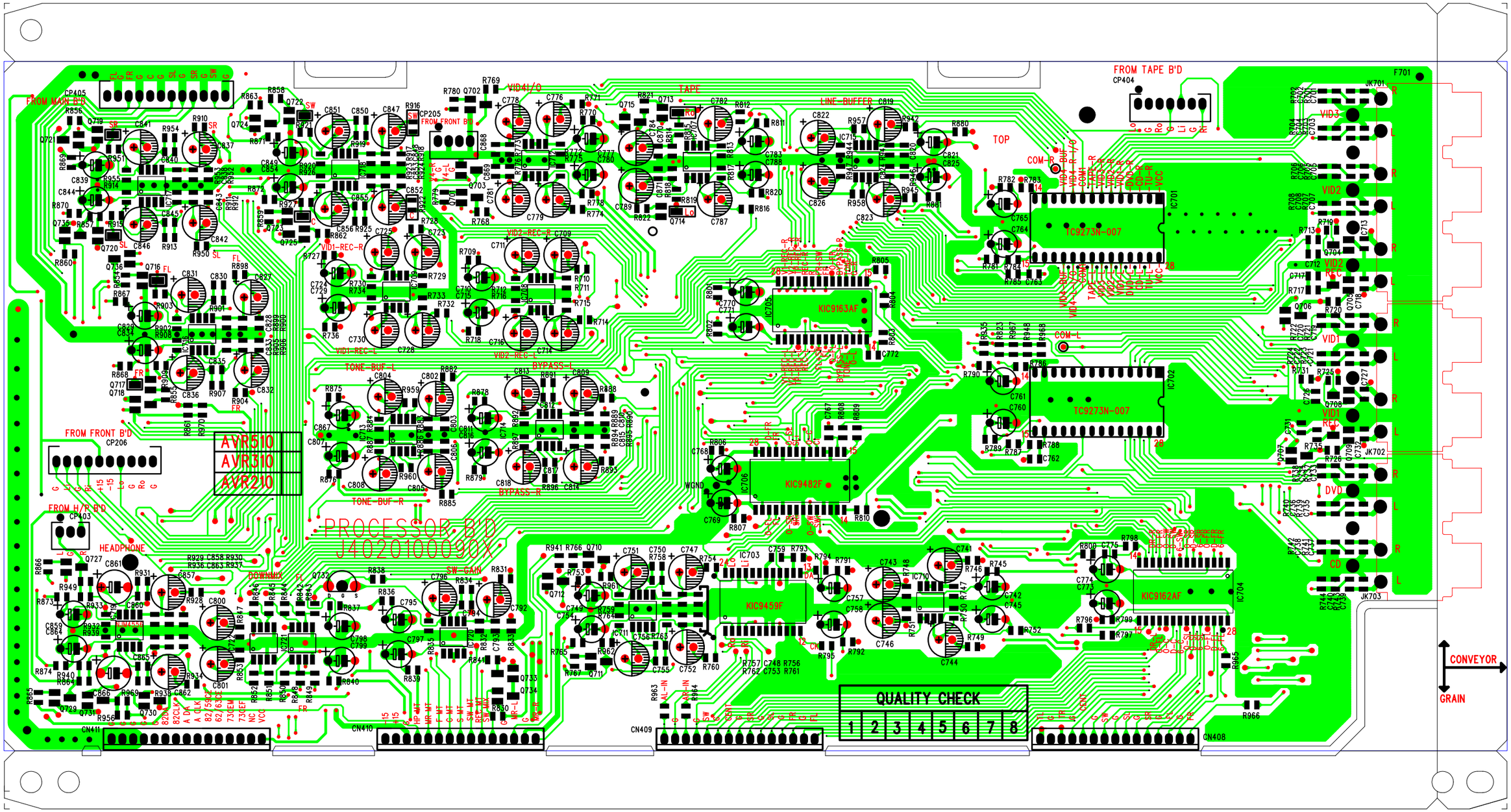
FROM MAIN B'D
CP405
FROM FRONT B'D
CP206
FROM H/R B'D
CP103
FROM TAPE B'D
CP404
AVR510
AVR310
AVR210
PROCESSOR B'D
J4020100090X
HEADPHONE
TAPE
LINE-BUFFER
TOP
VID4/O
VID3
VID2
VID2 REC
VID1
VID1 REC
DVD
CD
TC9273N-007
KIC9163AF
KIC9482F
KIC9459F
KIC9162AF
QUALITY CHECK
1 2 3 4 5 6 7 8
CONVEYOR
GRAIN
CN411
CN410
CN409
CN408

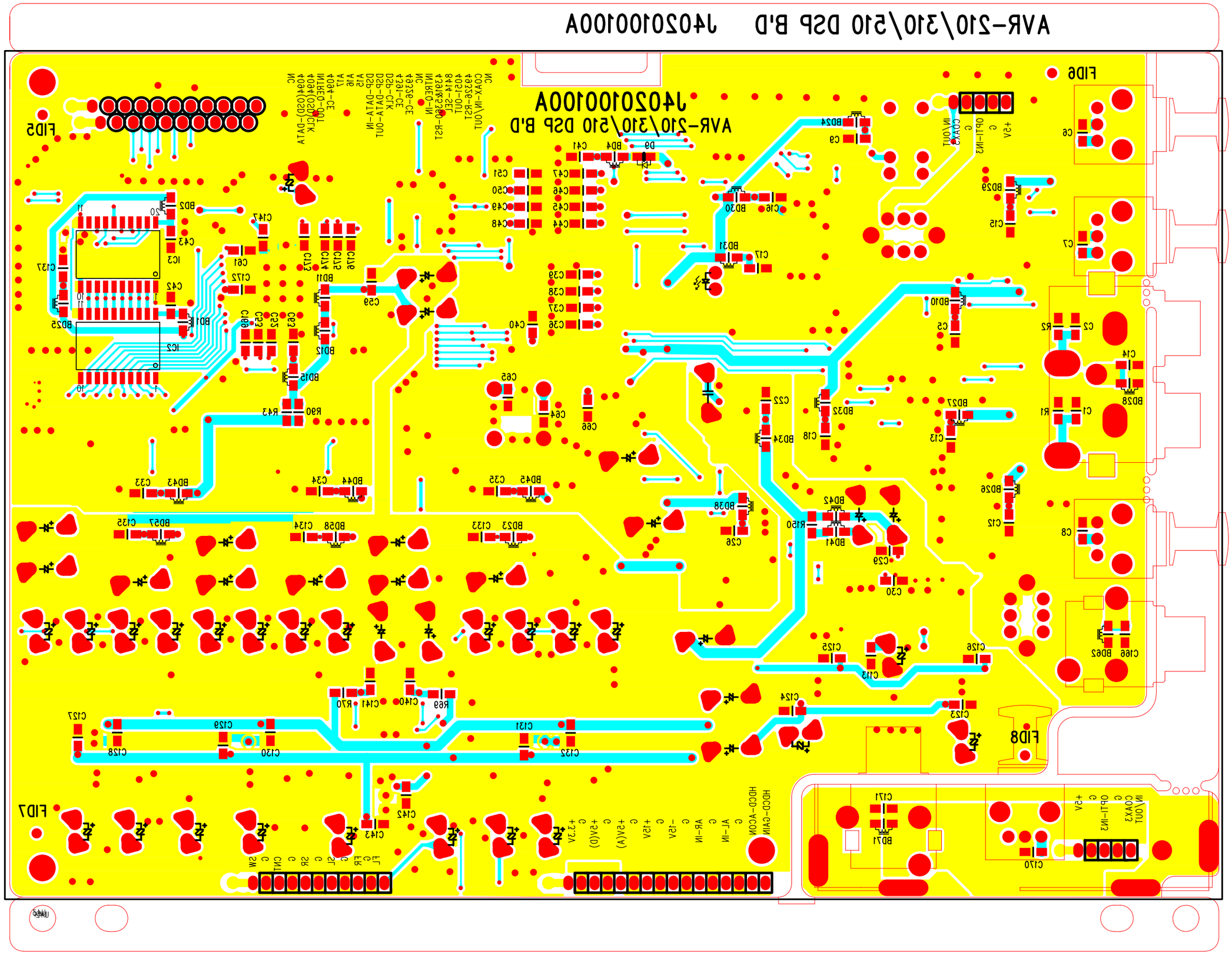

510_DSP-FTMS-MP-1.pcb - Tue Feb 13 20:25:16 2001

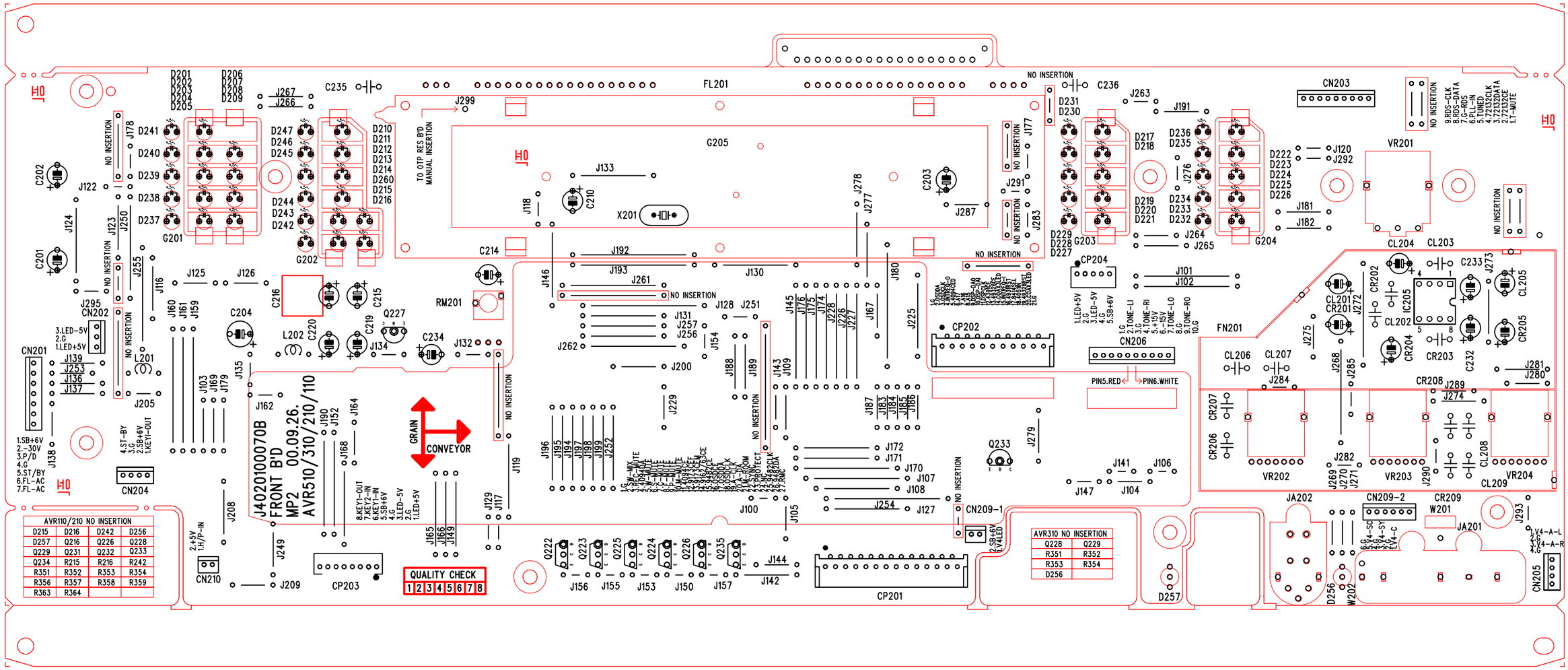
J402010007 0B
FRONT B'D
MP2
00.09.26.
AVR510/310/210/110
GRAIN
CONVEYOR
QUALITY CHECK
1 2 3 4 5 6 7 8
AVR110/210 NO INSERTION
D215 D216 D242 D256
D257 Q216 Q226 Q228
Q229 Q231 Q232 Q233
Q234 R215 R216 R242
R351 R352 R353 R354
R356 R357 R358 R359
R363 R364
AVR310 NO INSERTION
Q228 Q229
R351 R352
R353 R354
D256
NO INSERTION
TO OTP RES B'D
MANUAL INSERTION
FL201
G205
X201
CN201
CN202
CN203
CN204
CN205
CN206
CN209-1
CN209-2
CN210
CP201
CP202
CP203
CP204
VR201
VR202
VR203
VR204
FN201
RM201
PIN5.RED
PIN6.WHITE

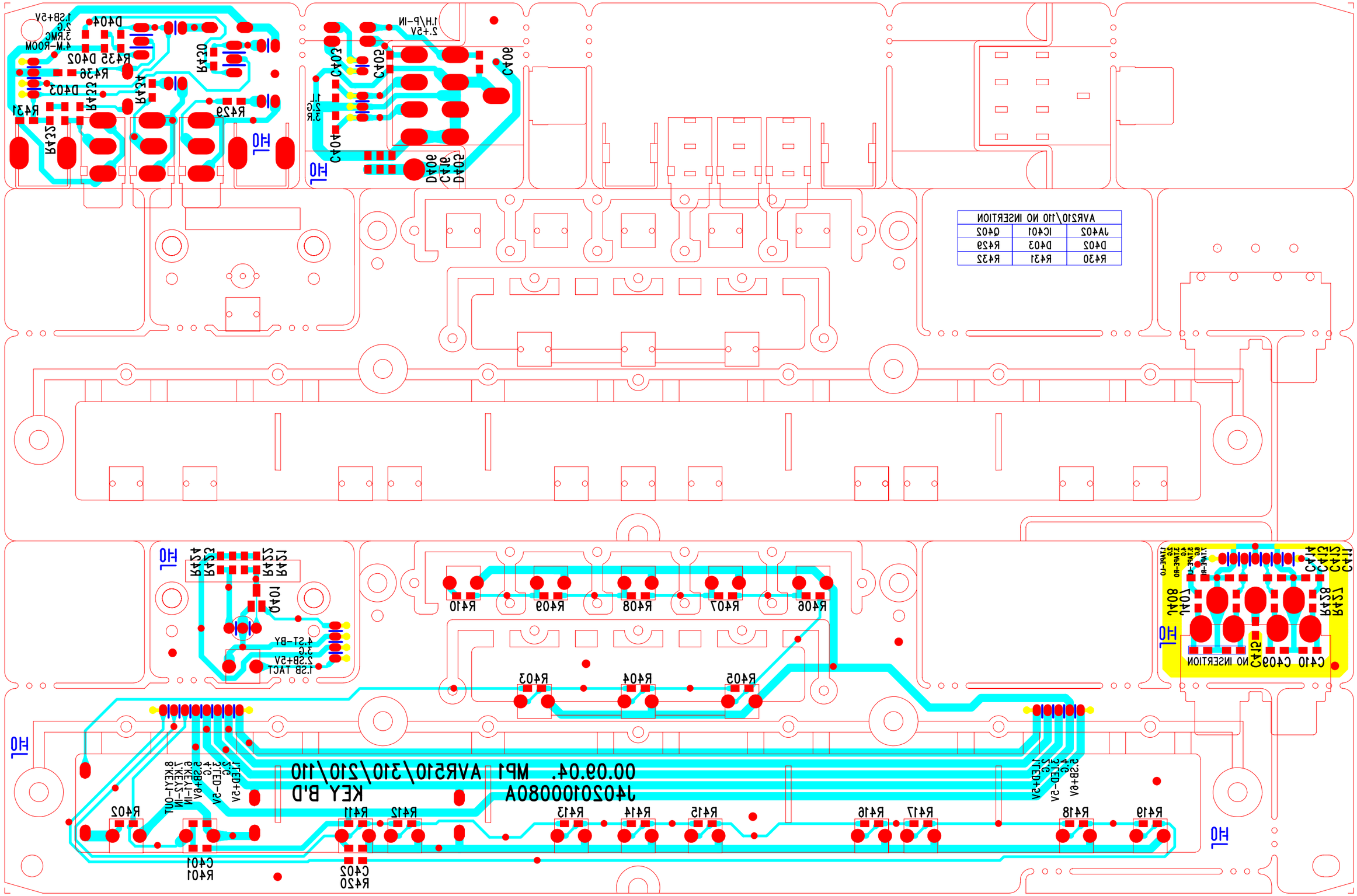
AVR210\110 NO INSERTION
J4402 IC401 Q402
D402 D403 R429
R430 R431 R432
NO INSERTION
00.09.04. MP1 AVR510\310\210\110
J4020100080A KEY B'D

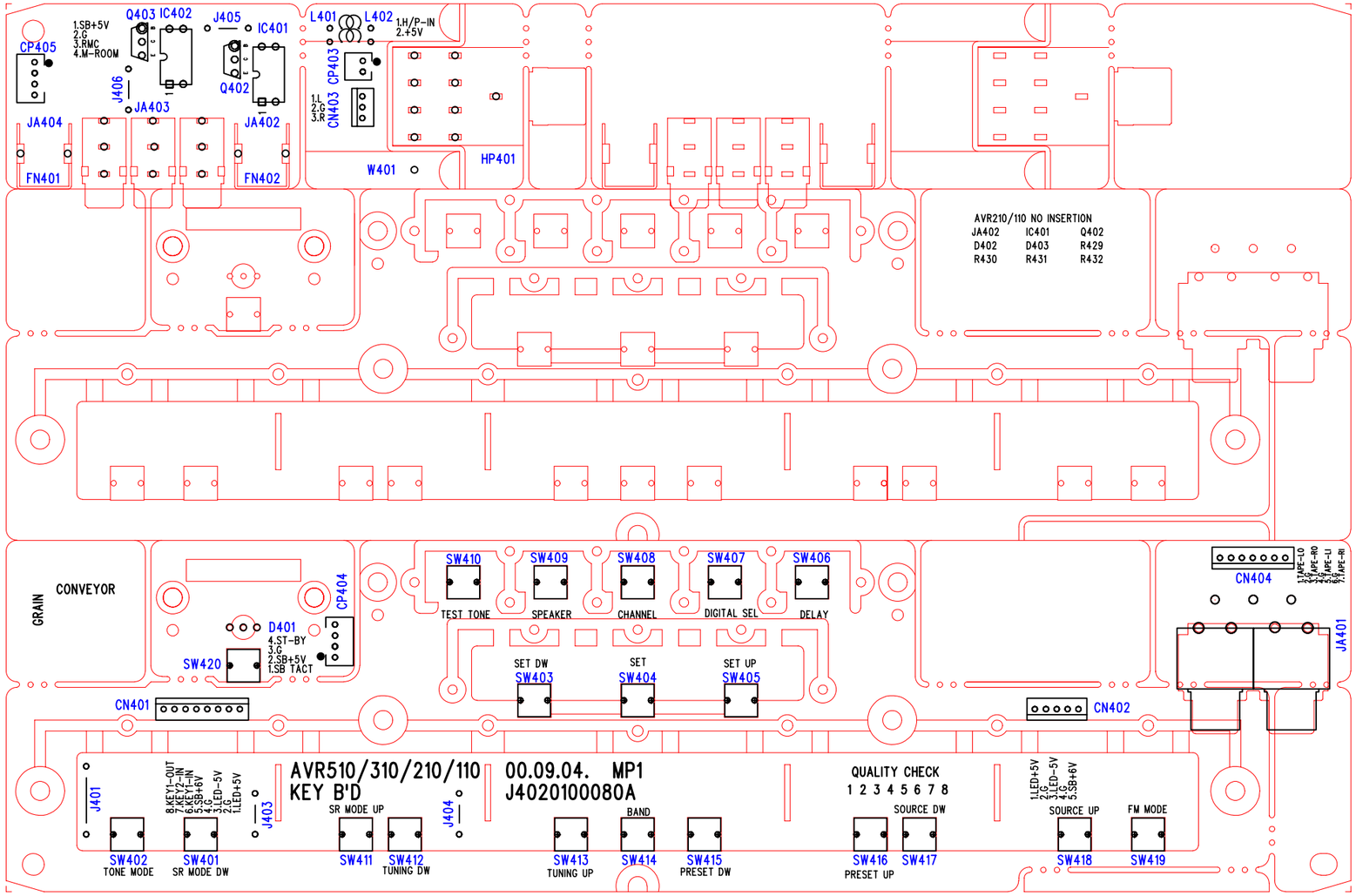
CP405
1.SB+5V
2.G
3.RMC
4.M-ROOM
Q403 IC402
J405
IC401
J406
JA403
Q402
JA404
JA402
FN401
FN402
L401
L402
1.H/P-IN
2.+5V
CP403
CN403
1.L
2.G
3.R
W401
HP401
AVR210/110 NO INSERTION
JA402 IC401 Q402
D402 D403 R429
R430 R431 R432
GRAIN
CONVEYOR
CP404
D401
4.ST-BY
3.G
2.SB+5V
1.SB TACT
SW420
CN401
SW410
SW409
SW408
SW407
SW406
TEST TONE
SPEAKER
CHANNEL
DIGITAL SEL
DELAY
SET DW
SW403
SET
SW404
SET UP
SW405
CN404
JA401
CN402
J401
8.KEY1-OUT
7.KEY2-IN
6.KEY3-IN
5.SB+6V
4.G
3.LED-5V
2.G
1.LED+5V
J403
AVR510/310/210/110
KEY B'D
00.09.04. MP1
J4020100080A
J404
SR MODE UP
BAND
QUALITY CHECK
1 2 3 4 5 6 7 8
SOURCE DW
1.LED+5V
2.G
3.LED-5V
4.G
5.SB+6V
SOURCE UP
FM MODE
SW402
TONE MODE
SW401
SR MODE DW
SW411
SW412
TUNING DW
SW413
TUNING UP
SW414
SW415
PRESET DW
SW416
PRESET UP
SW417
SW418
SW419

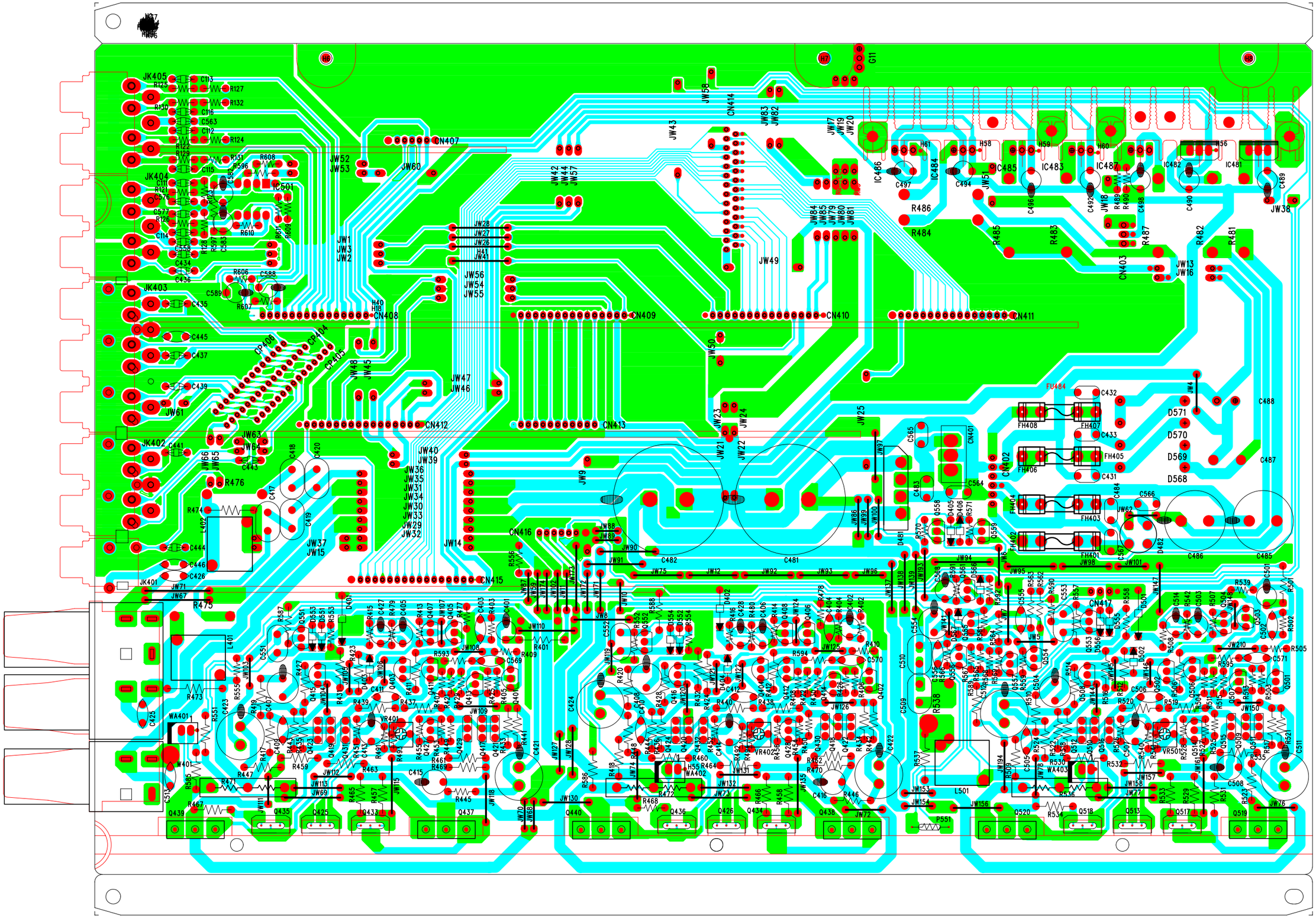

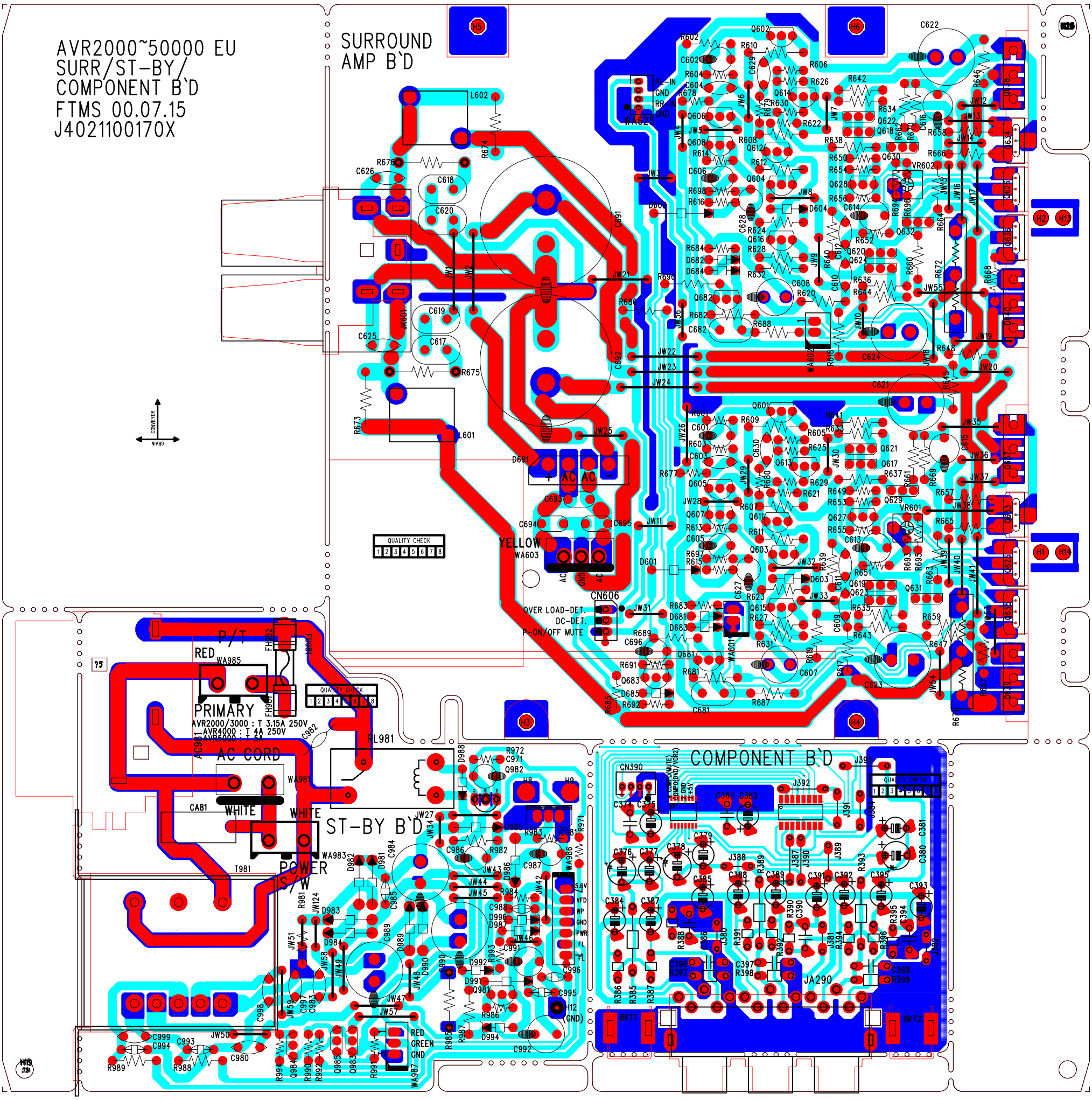
AVR2000~50000 EU
SURR/ST-BY/
COMPONENT B`D
FTMS 00.07.15
J4021100170X
SURROUND
AMP B`D
QUALITY CHECK
YELLOW
CN606
OVER LOAD-DET.
DC-DET.
P-ON/OFF MUTE
P/T
RED
PRIMARY
AVR2000/3000 : T 3.15A 250V
AVR4000 : T 4A 250V
AVR5000 : T 5A
AC CORD
WHITE
ST-BY B`D
POWER
S/W
RL981
COMPONENT B`D
JA290
CONVEYER
GRAIN

AVR 510 Electrical Parts List

Note: All quantities on any line = 1 unless otherwise noted.

Front/IR Remote/Headphone PCB

Designator Part Number Description

Semiconductors

	13-0482	D-SLP 1N4148 100.0
D201	J2301213022X	LED GN LTL1CHGEC 3
D202	J2301213022X	LED GN LTL1CHGEC 3
D203	J2301213022X	LED GN LTL1CHGEC 3
D204	J2301213022X	LED GN LTL1CHGEC 3
D205	J2301213022X	LED GN LTL1CHGEC 3
D206	J2301213022X	LED GN LTL1CHGEC 3
D207	J2301213022X	LED GN LTL1CHGEC 3
D208	J2301213022X	LED GN LTL1CHGEC 3
D209	J2301213022X	LED GN LTL1CHGEC 3
D210	J2301213022X	LED GN LTL1CHGEC 3
D211	J2301213022X	LED GN LTL1CHGEC 3
D212	J2301213022X	LED GN LTL1CHGEC 3
D213	J2301213022X	LED GN LTL1CHGEC 3
D214	J2301213022X	LED GN LTL1CHGEC 3
D215	J2301213022X	LED GN LTL1CHGEC 3
D216	J2301213022X	LED GN LTL1CHGEC 3
D217	J2301213022X	LED GN LTL1CHGEC 3
D218	J2301213022X	LED GN LTL1CHGEC 3
D219	J2301213022X	LED GN LTL1CHGEC 3
D220	J2301213022X	LED GN LTL1CHGEC 3
D221	J2301213022X	LED GN LTL1CHGEC 3
D222	J2301213022X	LED GN LTL1CHGEC 3
D223	J2301213022X	LED GN LTL1CHGEC 3
D224	J2301213022X	LED GN LTL1CHGEC 3
D225	J2301213022X	LED GN LTL1CHGEC 3
D226	J2301213022X	LED GN LTL1CHGEC 3
D227	J2301213022X	LED GN LTL1CHGEC 3
D228	J2301213022X	LED GN LTL1CHGEC 3
D229	J2301213022X	LED GN LTL1CHGEC 3
D230	J2301213022X	LED GN LTL1CHGEC 3
D231	J2301213022X	LED GN LTL1CHGEC 3
D232	J2301213022X	LED GN LTL1CHGEC 3
D233	J2301213022X	LED GN LTL1CHGEC 3
D234	J2301213022X	LED GN LTL1CHGEC 3
D235	J2301213022X	LED GN LTL1CHGEC 3
D236	J2301213022X	LED GN LTL1CHGEC 3
D237	J2301213022X	LED GN LTL1CHGEC 3
D238	J2301213022X	LED GN LTL1CHGEC 3
D239	J2301213022X	LED GN LTL1CHGEC 3
D240	J2301213022X	LED GN LTL1CHGEC 3
D241	J2301213022X	LED GN LTL1CHGEC 3
D242	J2301213022X	LED GN LTL1CHGEC 3
D243	J2301213022X	LED GN LTL1CHGEC 3
D244	J2301213022X	LED GN LTL1CHGEC 3
D245	J2301213022X	LED GN LTL1CHGEC 3
D246	J2301213022X	LED GN LTL1CHGEC 3
D247	J2301213022X	LED GN LTL1CHGEC 3
D256	J2302210012X	LED RED/GREEN 3F
D257	J2302210012X	LED RED/GREEN 3F
D260	J2301213022X	LED GN LTL1CHGEC 3
IC201	J2132314075X	IC CPU CXP828P602-1
IC205	J2110212000X	IC OPAMP 2068DD
Q201	J2041220202X	TR DTC114TK SMT3
Q201	J2041220701X	TR KRC111S SOT23
Q202	J2041220202X	TR DTC114TK SMT3
Q202	J2041220701X	TR KRC111S SOT23

Designator Part Number Description

Q203	J2041220202X	TR DTC114TK SMT3
Q203	J2041220701X	TR KRC111S SOT23
Q204	J2041220202X	TR DTC114TK SMT3
Q222	J2021220001X	TR NPN KRC107M
Q222	J2021220102X	TR NPN DTC114YSA
Q223	J2021220001X	TR NPN KRC107M
Q223	J2021220102X	TR NPN DTC114YSA
Q224	J2021220001X	TR NPN KRC107M
Q224	J2021220102X	TR NPN DTC114YSA
Q225	J2021220001X	TR NPN KRC107M
Q225	J2021220102X	TR NPN DTC114YSA
Q226	J2021220001X	TR NPN KRC107M
Q226	J2021220102X	TR NPN DTC114YSA
Q227	J2021020801X	TR MPSA06 Y TO-92
Q233	J2021000601X	TR PNP MPSA56 Y
Q235	J2021220001X	TR NPN KRC107M
Q235	J2021220102X	TR NPN DTC114YSA
Q204	J2041220701X	TR KRC111S SOT23
Q205	J2041220202X	TR DTC114TK SMT3
Q205	J2041220701X	TR KRC111S SOT23
Q206	J2041220202X	TR DTC114TK SMT3
Q206	J2041220701X	TR KRC111S SOT23
Q207	J2041220202X	TR DTC114TK SMT3
Q207	J2041220701X	TR KRC111S SOT23
Q208	J2041220202X	TR DTC114TK SMT3
Q208	J2041220701X	TR KRC111S SOT23
Q209	J2041220202X	TR DTC114TK SMT3
Q209	J2041220701X	TR KRC111S SOT23
Q210	J2041220202X	TR DTC114TK SMT3
Q210	J2041220701X	TR KRC111S SOT23
Q211	J2041220202X	TR DTC114TK SMT3
Q211	J2041220701X	TR KRC111S SOT23
Q212	J2041220202X	TR DTC114TK SMT3
Q212	J2041220701X	TR KRC111S SOT23
Q213	J2041220202X	TR DTC114TK SMT3
Q213	J2041220701X	TR KRC111S SOT23
Q214	J2041220202X	TR DTC114TK SMT3
Q214	J2041220701X	TR KRC111S SOT23
Q215	J2041220202X	TR DTC114TK SMT3
Q215	J2041220701X	TR KRC111S SOT23
Q216	J2041220202X	TR DTC114TK SMT3
Q216	J2041220701X	TR KRC111S SOT23
Q217	J2041220202X	TR DTC114TK SMT3
Q217	J2041220701X	TR KRC111S SOT23
Q218	J2041220202X	TR DTC114TK SMT3
Q218	J2041220701X	TR KRC111S SOT23
Q219	J2041220202X	TR DTC114TK SMT3
Q219	J2041220701X	TR KRC111S SOT23
Q220	J2041220202X	TR DTC114TK SMT3
Q220	J2041220701X	TR KRC111S SOT23
Q221	J2041220202X	TR DTC114TK SMT3
Q221	J2041220701X	TR KRC111S SOT23
Q228	J2041220102X	TR NPN DTC114YKA
Q228	J2041220201X	TR CHIP NPN KRC107
Q229	J2041220102X	TR NPN DTC114YKA
Q229	J2041220201X	TR CHIP NPN KRC107
Q231	J2041220102X	TR NPN DTC114YKA
Q231	J2041220201X	TR CHIP NPN KRC107
Q232	J2041220102X	TR NPN DTC114YKA
Q232	J2041220201X	TR CHIP NPN KRC107
Q234	J2041220102X	TR NPN DTC114YKA
Q234	J2041220201X	TR CHIP NPN KRC107

Designator	Part Number	Description
Q236	J2041200101X	TR PNP KRA107S
Q236	J2041200102X	TR PNP DTA114YKA
Q237	J2041220102X	TR NPN DTC114YKA
Q237	J2041220201X	TR CHIP NPN KRC107
D248	J2244010104X	DIODE CHIP 1SS355
D249	J2244010104X	DIODE CHIP 1SS355
D250	J2244010104X	DIODE CHIP 1SS355
D251	J2244010104X	DIODE CHIP 1SS355
D253	J2244010104X	DIODE CHIP 1SS355
D254	J2244010104X	DIODE CHIP 1SS355
D255	J2244010104X	DIODE CHIP 1SS355
D261	J2244010104X	DIODE CHIP 1SS355
D262	J2244010104X	DIODE CHIP 1SS355
D263	8044051091	RMGCFMIN 0 OHM +0%
D264	8044051091	RMGCFMIN 0 OHM +0%
IC202	J2141004002X	IC BU4094 SOP16
IC203	J2141004002X	IC BU4094 SOP16
IC204	J2141004002X	IC BU4094 SOP16

Capacitors

C203	2026783030	CE 47U0F +20% 16.0
C210	2026888030	CE 10U0F +20% 50.0
C216	J3433247321X	CAP GOLD 0.047F 5.
CL201	1500213030	CE 10U0F +20% 16.0
CL202	3093623071	CC 100P0F +5% -5%
CL203	8043459071	CC 22P0F +5% -5% 5
CL204	1500213030	CE 10U0F +20% 16.0
CL205	1500213030	CE 10U0F +20% 16.0
CL206	J3640183232X	CAP M POLY 18NF 10
CL207	J3640823232X	CAP M POLY 82NF 10
CL208	J3640332232X	CAP POLY 3N3F 100V
CL209	J3640183232X	CAP M POLY 18NF 10
CR201	1500213030	CE 10U0F +20% 16.0
CR202	3093623071	CC 100P0F +5% -5%
CR203	8043459071	CC 22P0F +5% -5% 5
CR204	1500213030	CE 10U0F +20% 16.0
CR205	1500213030	CE 10U0F +20% 16.0
CR206	J3640183232X	CAP M POLY 18NF 10
CR207	J3640823232X	CAP M POLY 82NF 10
CR208	J3640332232X	CAP POLY 3N3F 100V
CR209	J3640183232X	CAP M POLY 18NF 10
C201	2026783030	CE 47U0F +20% 16.0
C202	2026783030	CE 47U0F +20% 16.0
C204	2026901030	CE 47U0F +20% 50.0
C214	2026783030	CE 47U0F +20% 16.0
C215	2026783030	CE 47U0F +20% 16.0
C219	2026901030	CE 47U0F +20% 50.0
C220	2026888030	CE 10U0F +20% 50.0
C232	2026783030	CE 47U0F +20% 16.0
C233	2026783030	CE 47U0F +20% 16.0
C234	J3470110871X	CE SG 0.1UF 50V M
C235	J3600473330X	CP .047U 100V K
C236	J3600473330X	CP .047U 100V K
CL211	1105867091	CCCFMIN 100P0F +5%
CR211	1105867091	CCCFMIN 100P0F +5%
C205	2026729091	CCCFMIN 100N0F +80
C206	5088236091	CCCFMIN 33P0F +5%
C208	5088236091	CCCFMIN 33P0F +5%
C209	2026729091	CCCFMIN 100N0F +80
C211	1507090091	CCCFMIN 820P0F +10
C212	1507090091	CCCFMIN 820P0F +10
C213	2026729091	CCCFMIN 100N0F +80
C217	2026729091	CCCFMIN 100N0F +80
C218	2026729091	CCCFMIN 100N0F +80
C228	1105867091	CCCFMIN 100P0F +5%
C229	1105867091	CCCFMIN 100P0F +5%
C230	1105867091	CCCFMIN 100P0F +5%
C237	2026729091	CCCFMIN 100N0F +80
C238	2026729091	CCCFMIN 100N0F +80
C239	2026729091	CCCFMIN 100N0F +80
C240	2026729091	CCCFMIN 100N0F +80
C241	2026729091	CCCFMIN 100N0F +80
C242	2026729091	CCCFMIN 100N0F +80
C244	2026729091	CCCFMIN 100N0F +80
C245	2026729091	CCCFMIN 100N0F +80
C246	1105867091	CCCFMIN 100P0F +5%
C247	1105867091	CCCFMIN 100P0F +5%
C248	1105867091	CCCFMIN 100P0F +5%

Resistors

RL201	2047195091	RMGCFMIN 1K0 OHM +
RL202	5088663091	RMGCFMIN 100K0 OHM
RL203	5088667091	RMGCFMIN 1M0 OHM +
RL204	1106648091	RMGCFMIN 47K0 OHM
RL205	9057440091	RMGCFMIN 470R0 OHM
RL206	5088663091	RMGCFMIN 100K0 OHM
RL207	2047194091	RMGCFMIN 680R0 OHM
RL208	6044439091	RMGCFMIN 3K9 OHM +
RL209	6044440091	RMGCFMIN 22K0 OHM
RL210	8044039091	RMGCFMIN 2K2 OHM +
RR201	2047195091	RMGCFMIN 1K0 OHM +
RR202	5088663091	RMGCFMIN 100K0 OHM
RR203	5088667091	RMGCFMIN 1M0 OHM +
RR204	1106648091	RMGCFMIN 47K0 OHM
RR205	9057440091	RMGCFMIN 470R0 OHM
RR206	5088663091	RMGCFMIN 100K0 OHM
RR207	2047194091	RMGCFMIN 680R0 OHM
RR208	6044439091	RMGCFMIN 3K9 OHM +
RR209	6044440091	RMGCFMIN 22K0 OHM
RR210	8044039091	RMGCFMIN 2K2 OHM +
R201	8044037091	RMGCFMIN 150R0 OHM
R202	8044037091	RMGCFMIN 150R0 OHM
R203	8044037091	RMGCFMIN 150R0 OHM
R204	8044037091	RMGCFMIN 150R0 OHM
R205	8044037091	RMGCFMIN 150R0 OHM
R206	8044037091	RMGCFMIN 150R0 OHM
R207	8044037091	RMGCFMIN 150R0 OHM
R208	8044037091	RMGCFMIN 150R0 OHM
R209	8044037091	RMGCFMIN 150R0 OHM
R210	8044037091	RMGCFMIN 150R0 OHM
R211	8044037091	RMGCFMIN 150R0 OHM
R212	8044037091	RMGCFMIN 150R0 OHM
R213	8044037091	RMGCFMIN 150R0 OHM
R214	8044037091	RMGCFMIN 150R0 OHM
R215	8044037091	RMGCFMIN 150R0 OHM
R216	8044037091	RMGCFMIN 150R0 OHM
R217	8044037091	RMGCFMIN 150R0 OHM
R218	8044037091	RMGCFMIN 150R0 OHM
R219	8044037091	RMGCFMIN 150R0 OHM
R220	8044037091	RMGCFMIN 150R0 OHM
R221	8044037091	RMGCFMIN 150R0 OHM
R222	8044037091	RMGCFMIN 150R0 OHM
R223	8044037091	RMGCFMIN 150R0 OHM
R224	8044037091	RMGCFMIN 150R0 OHM
R225	8044037091	RMGCFMIN 150R0 OHM
R226	8044037091	RMGCFMIN 150R0 OHM
R227	8044037091	RMGCFMIN 150R0 OHM
R228	8044037091	RMGCFMIN 150R0 OHM
R229	8044037091	RMGCFMIN 150R0 OHM
R230	8044037091	RMGCFMIN 150R0 OHM
R231	8044037091	RMGCFMIN 150R0 OHM
R232	8044037091	RMGCFMIN 150R0 OHM

Designator	Part Number	Description
R233	8044037091	RMGCFMIN 150R0 OHM
R234	8044037091	RMGCFMIN 150R0 OHM
R235	8044037091	RMGCFMIN 150R0 OHM
R236	8044037091	RMGCFMIN 150R0 OHM
R237	8044037091	RMGCFMIN 150R0 OHM
R238	8044037091	RMGCFMIN 150R0 OHM
R239	8044037091	RMGCFMIN 150R0 OHM
R240	8044037091	RMGCFMIN 150R0 OHM
R241	8044037091	RMGCFMIN 150R0 OHM
R242	8044037091	RMGCFMIN 150R0 OHM
R243	8044037091	RMGCFMIN 150R0 OHM
R244	8044037091	RMGCFMIN 150R0 OHM
R245	8044037091	RMGCFMIN 150R0 OHM
R246	8044037091	RMGCFMIN 150R0 OHM
R247	8044037091	RMGCFMIN 150R0 OHM
R249	2047195091	RMGCFMIN 1K0 OHM +
R250	2047195091	RMGCFMIN 1K0 OHM +
R251	2047195091	RMGCFMIN 1K0 OHM +
R252	7043420091	RMGCFMIN 100R0 OHM
R253	2047195091	RMGCFMIN 1K0 OHM +
R254	2047195091	RMGCFMIN 1K0 OHM +
R255	2047195091	RMGCFMIN 1K0 OHM +
R256	2047195091	RMGCFMIN 1K0 OHM +
R257	7043420091	RMGCFMIN 100R0 OHM
R258	2047195091	RMGCFMIN 1K0 OHM +
R259	2047195091	RMGCFMIN 1K0 OHM +
R260	2047195091	RMGCFMIN 1K0 OHM +
R261	2047195091	RMGCFMIN 1K0 OHM +
R264	7043420091	RMGCFMIN 100R0 OHM
R265	2047195091	RMGCFMIN 1K0 OHM +
R266	3094431091	RMGCFMIN 4K7 OHM +
R267	3094431091	RMGCFMIN 4K7 OHM +
R268	3094431091	RMGCFMIN 4K7 OHM +
R269	3094431091	RMGCFMIN 4K7 OHM +
R270	3094431091	RMGCFMIN 4K7 OHM +
R271	2047195091	RMGCFMIN 1K0 OHM +
R272	2047195091	RMGCFMIN 1K0 OHM +
R273	2047195091	RMGCFMIN 1K0 OHM +
R274	2047195091	RMGCFMIN 1K0 OHM +
R275	2047195091	RMGCFMIN 1K0 OHM +
R276	7043420091	RMGCFMIN 100R0 OHM
R277	1035519091	RMGCFMIN 2R2 OHM +
R278	1035519091	RMGCFMIN 2R2 OHM +
R279	5088661091	RMGCFMIN 10K0 OHM
R280	5088661091	RMGCFMIN 10K0 OHM
R281	5088661091	RMGCFMIN 10K0 OHM
R283	5088661091	RMGCFMIN 10K0 OHM
R284	2047195091	RMGCFMIN 1K0 OHM +
R285	2047195091	RMGCFMIN 1K0 OHM +
R286	5088661091	RMGCFMIN 10K0 OHM
R287	1106650091	RMGCFMIN 68K0 OHM
R288	1106650091	RMGCFMIN 68K0 OHM
R289	1106648091	RMGCFMIN 47K0 OHM
R290	3094431091	RMGCFMIN 4K7 OHM +
R291	7043420091	RMGCFMIN 100R0 OHM
R292	5088663091	RMGCFMIN 100K0 OHM
R293	1106646091	RMGCFMIN 8K2 OHM +
R294	5088661091	RMGCFMIN 10K0 OHM
R295	2047195091	RMGCFMIN 1K0 OHM +
R296	2047195091	RMGCFMIN 1K0 OHM +
R297	2047195091	RMGCFMIN 1K0 OHM +
R298	3094431091	RMGCFMIN 4K7 OHM +
R299	3094431091	RMGCFMIN 4K7 OHM +
R300	3094431091	RMGCFMIN 4K7 OHM +
R351	9057440091	RMGCFMIN 470R0 OHM
R352	9057440091	RMGCFMIN 470R0 OHM
R353	1106642091	RMGCFMIN 390R0 OHM
R354	1106642091	RMGCFMIN 390R0 OHM
R356	9057440091	RMGCFMIN 470R0 OHM
R357	9057440091	RMGCFMIN 470R0 OHM
R358	1106642091	RMGCFMIN 390R0 OHM
R359	1106642091	RMGCFMIN 390R0 OHM
R361	2047192091	RMGCFMIN 220R0 OHM
R362	2047192091	RMGCFMIN 220R0 OHM
R363	2047192091	RMGCFMIN 220R0 OHM
R364	2047195091	RMGCFMIN 1K0 OHM +
R365	8044037091	RMGCFMIN 150R0 OHM
R366	2047195091	RMGCFMIN 1K0 OHM +
VR202	J32214000201	VR-ROTARY 14MM
VR203	J32214000201	VR-ROTARY 14MM
VR204	J32214000101	VR-ROTARY 14MM
J173	8044051091	RMGCFMIN 0 OHM +0%
J201	8044051091	RMGCFMIN 0 OHM +0%
J202	8044051091	RMGCFMIN 0 OHM +0%
J203	8044051091	RMGCFMIN 0 OHM +0%
J204	8044051091	RMGCFMIN 0 OHM +0%
J206	8044051091	RMGCFMIN 0 OHM +0%
J207	8044051091	RMGCFMIN 0 OHM +0%
J210	8044051091	RMGCFMIN 0 OHM +0%
J211	8044051091	RMGCFMIN 0 OHM +0%
J212	8044051091	RMGCFMIN 0 OHM +0%
J213	8044051091	RMGCFMIN 0 OHM +0%
J214	8044051091	RMGCFMIN 0 OHM +0%
J215	8044051091	RMGCFMIN 0 OHM +0%
J222	8044051091	RMGCFMIN 0 OHM +0%
J223	8044051091	RMGCFMIN 0 OHM +0%
J230	8044051091	RMGCFMIN 0 OHM +0%
J231	8044051091	RMGCFMIN 0 OHM +0%
J232	8044051091	RMGCFMIN 0 OHM +0%
J233	8044051091	RMGCFMIN 0 OHM +0%
J234	8044051091	RMGCFMIN 0 OHM +0%
J235	8044051091	RMGCFMIN 0 OHM +0%
J236	8044051091	RMGCFMIN 0 OHM +0%
J237	8044051091	RMGCFMIN 0 OHM +0%
J238	8044051091	RMGCFMIN 0 OHM +0%
J239	8044051091	RMGCFMIN 0 OHM +0%
J243	8044051091	RMGCFMIN 0 OHM +0%
J244	8044051091	RMGCFMIN 0 OHM +0%
J245	8044051091	RMGCFMIN 0 OHM +0%
J246	8044051091	RMGCFMIN 0 OHM +0%
J247	8044051091	RMGCFMIN 0 OHM +0%
J248	8044051091	RMGCFMIN 0 OHM +0%
J288	8044051091	RMGCFMIN 0 OHM +0%
J294	8044051091	RMGCFMIN 0 OHM +0%
J297	8044051091	RMGCFMIN 0 OHM +0%
J298	8044051091	RMGCFMIN 0 OHM +0%

Miscellaneous

	J63330000600	SPONGE SENSOR H:25
	J4420040300X	CNT PLUG 2.5 3P
FL201	J2352230020X	VFD HNA-16LL15
FN201	J60600006000	SHIELD FENCE TONE
CN201	J4305100051X	CNT ASSY 7P 450MM
CN202	J4305100052X	CNT ASSY 3P 620MM
CN203	J4305100055X	CNT ASSY 9P 400MM
CN204	J4305100053X	CNT ASSY 4P 100MM
CN205	J4305100058X	CNT ASSY 4P 360MM
CN206	J4305100057X	CNT ASSY 10P 220MM
CN207	J4112213801X	FPC CABLE 21P 380M
CN208	J4112275001X	FPC CABLE 27P 500M
CN209	J4305100059X	CNT ASSY 8P 500MM
CN210	J4305100063X	CNT ASSY 2P 100MM
CP201	J4422212740X	FPC PLUG 27P 1.25

Designator	Part Number	Description
CP202	J4422212140X	FPC PLUG 21P 1.25M
CP203	J4420030840X	CNT PLUG 2.0 ST 8P
CP204	J4420030540X	CNT PLUG 2.0 ST 5P
JA201	J44303000100	JACK RCA 3P
JA202	J44311000100	JACK S-VIDEO 1P
L201	J2616247920X	COIL 4.7UH K
L202	J2616247920X	COIL 4.7UH K
RM201	J2411220017X	REM 38HZ
RM201	J2411320014X	REM 38KHZ
VR201	J32616100001	ENCODER EC 16E
W201	J4305100025X	LUG WIRE 1P 200MM
X201	J3911030020X	RESONATOR ZTA10MTT

Key PCB

Semiconductors

Q401	J2041220102X	TR NPN DTC114YKA
Q401	J2041220201X	TR CHIP NPN KRC107
D402	J2244010104X	DIODE CHIP 1SS355
D403	J2244010104X	DIODE CHIP 1SS355
D404	J2244010104X	DIODE CHIP 1SS355
D405	J2244010104X	DIODE CHIP 1SS355
D406	J2244010104X	DIODE CHIP 1SS355
Q403	J2021200501X	TR PNP KRA107M
Q402	J2021200002X	TR PNP DTA114YS
Q402	J2021200501X	TR PNP KRA107M
Q403	J2021200002X	TR PNP DTA114YS
IC401	J2123239001X	IC PC-17T1 PHOTOCO
IC402	J2123239001X	IC PC-17T1 PHOTOCO
D401	J2302210012X	LED RED/GREEN 3F
D401	J2302310012X	LED RED/GREEN 5

Capacitors

C401	3093924091	CCCFMIN 22N0F +10%
C402	3093924091	CCCFMIN 22N0F +10%
C403	1105933091	CCCFMIN 2N2F +10%
C404	1105933091	CCCFMIN 2N2F +10%
C405	2026729091	CCCFMIN 100N0F +80
C406	2026729091	CCCFMIN 100N0F +80
C409	1105867091	CCCFMIN 100P0F +5%
C410	1105867091	CCCFMIN 100P0F +5%
C411	1105867091	CCCFMIN 100P0F +5%
C412	1105867091	CCCFMIN 100P0F +5%
C413	1105867091	CCCFMIN 100P0F +5%
C414	1105867091	CCCFMIN 100P0F +5%
C415	2026729091	CCCFMIN 100N0F +80
C416	2026729091	CCCFMIN 100N0F +80

Resistors

R401	5088661091	RMGCFMIN 10K0 OHM
R402	2047195091	RMGCFMIN 1K0 OHM +
R403	7043423091	RMGCFMIN 1K2 OHM +
R404	4043829091	RMGCFMIN 1K5 OHM +
R405	8044039091	RMGCFMIN 2K2 OHM +
R406	5088659091	RMGCFMIN 2K7 OHM +
R407	1106644091	RMGCFMIN 3K3 OHM +
R408	8044040091	RMGCFMIN 5K6 OHM +
R409	1106646091	RMGCFMIN 8K2 OHM +
R410	9057443091	RMGCFMIN 18K0 OHM
R411	5088661091	RMGCFMIN 10K0 OHM
R412	2047195091	RMGCFMIN 1K0 OHM +
R413	7043423091	RMGCFMIN 1K2 OHM +
R414	4043829091	RMGCFMIN 1K5 OHM +
R415	8044039091	RMGCFMIN 2K2 OHM +
R416	5088659091	RMGCFMIN 2K7 OHM +
R417	1106644091	RMGCFMIN 3K3 OHM +
R418	8044040091	RMGCFMIN 5K6 OHM +
R419	1106646091	RMGCFMIN 8K2 OHM +
R420	9057443091	RMGCFMIN 18K0 OHM
R421	6044437091	RMGCFMIN 180R0 OHM
R422	6044437091	RMGCFMIN 180R0 OHM
R423	2047194091	RMGCFMIN 680R0 OHM
R424	2047194091	RMGCFMIN 680R0 OHM
R427	9057440091	RMGCFMIN 470R0 OHM
R428	9057440091	RMGCFMIN 470R0 OHM
R429	9057440091	RMGCFMIN 470R0 OHM
R430	6044439091	RMGCFMIN 3K9 OHM +
R431	1106648091	RMGCFMIN 47K0 OHM
R432	6044435091	RMGCFMIN 47R0 OHM
R433	6044435091	RMGCFMIN 47R0 OHM
R434	6044438091	RMGCFMIN 270R0 OHM
R435	5088661091	RMGCFMIN 10K0 OHM
R436	1106648091	RMGCFMIN 47K0 OHM

Miscellaneous

SW401	J46500500501	SW TACT SKQNAE
SW402	J46500500501	SW TACT SKQNAE
SW403	J46500500501	SW TACT SKQNAE
SW404	J46500500501	SW TACT SKQNAE
SW405	J46500500501	SW TACT SKQNAE
SW406	J46500500501	SW TACT SKQNAE
SW407	J46500500501	SW TACT SKQNAE
SW408	J46500500501	SW TACT SKQNAE
SW409	J46500500501	SW TACT SKQNAE
SW410	J46500500501	SW TACT SKQNAE
SW411	J46500500501	SW TACT SKQNAE
SW412	J46500500501	SW TACT SKQNAE
SW413	J46500500501	SW TACT SKQNAE
SW414	J46500500501	SW TACT SKQNAE
SW415	J46500500501	SW TACT SKQNAE
SW416	J46500500501	SW TACT SKQNAE
SW417	J46500500501	SW TACT SKQNAE
SW418	J46500500501	SW TACT SKQNAE
SW419	J46500500501	SW TACT SKQNAE
SW420	J46500500501	SW TACT SKQNAE
CN401	J4305100054X	CNT ASSY 8P 100MM
CN402	J4305100056X	CNT ASSY 5P 100MM
CN403	J4305100062X	CNT ASSY 3P 600MM
CN404	J4305100071X	CNT ASSY 7P 100MM
CP403	J4420030240X	CON WAFER 2P 2.0
CP404	J4420030440X	CNT PLUG 4P 2.0MM
CP405	J4420030440X	CNT PLUG 4P 2.0MM
FN401	J60300028000	BKT GROUND ET 0.5T
FN402	J60300028000	BKT GROUND ET 0.5T
HP401	J44329000102	JACK MIC 9P GOLD
JA401	J44302401201	JACK RCA 4P S
JA402	J44333000001	STEREO JACK JW-350
JA403	J44333000001	STEREO JACK JW-350
JA404	J44333000001	STEREO JACK JW-350
L401	J2616247020X	COIL 47UH
L402	J2616247020X	COIL 47UH
W401	J4305100025X	LUG WIRE 1P 200MM
J407	8044051091	RMGCFMIN 0 OHM +0%
J408	8044051091	RMGCFMIN 0 OHM +0%

Video PCB

Semiconductors

Q602	J2021021501X	TR KTC2874 B NPN T

Designator	Part Number	Description
Q602	J2021021601X	TR KTC2874 A NPN T
Q603	J2021021501X	TR KTC2874 B NPN T
Q603	J2021021601X	TR KTC2874 A NPN T
Q604	J2021021501X	TR KTC2874 B NPN T
Q604	J2021021601X	TR KTC2874 A NPN T
Q605	J2021000102X	TR PNP 2SA933S
Q609	J2021021501X	TR KTC2874 B NPN T
Q609	J2021021601X	TR KTC2874 A NPN T
Q610	J2021060001X	TR NPN KTD1302 B
Q614	J2021220002X	TR NPN 2SC1740S
Q615	J2021021501X	TR KTC2874 B NPN T
Q615	J2021021601X	TR KTC2874 A NPN T
Q616	J2021021501X	TR KTC2874 B NPN T
Q616	J2021021601X	TR KTC2874 A NPN T
Q619	J2021220002X	TR NPN 2SC1740S
Q620	J2021000102X	TR PNP 2SA933S
Q621	J2021000102X	TR PNP 2SA933S
Q622	J2021000102X	TR PNP 2SA933S
Q623	J2021000102X	TR PNP 2SA933S
IC607	J2116209002X	IC OSD M35013
IC609	J2116204001X	IC VIDEO BA7046
D601	J2244010104X	DIODE CHIP 1SS355
D602	J2244010104X	DIODE CHIP 1SS355
D603	J2244010104X	DIODE CHIP 1SS355
D604	J2244010104X	DIODE CHIP 1SS355
D605	J2244010104X	DIODE CHIP 1SS355
D606	J2244010104X	DIODE CHIP 1SS355
D607	J2244010104X	DIODE CHIP 1SS355
D608	J2244010104X	DIODE CHIP 1SS355
D609	J2244010104X	DIODE CHIP 1SS355
D611	J2244010104X	DIODE CHIP 1SS355
D612	J2244010104X	DIODE CHIP 1SS355
D613	J2244010104X	DIODE CHIP 1SS355
D614	J2244010104X	DIODE CHIP 1SS355
D615	J2244010104X	DIODE CHIP 1SS355
IC601	J2116012001X	IC VIDEO NJM2296
IC602	J2116012001X	IC VIDEO NJM2296
IC603	J2116012001X	IC VIDEO NJM2296
IC605	J2141004002X	IC BU4094 SOP16
IC606	J2141004002X	IC BU4094 SOP16
IC608	J2141004003X	IC BU4053
IC619	J2141004002X	IC BU4094 SOP16
Q601	J2041220102X	TR NPN DTC114YKA
Q601	J2041220201X	TR CHIP NPN KRC107
Q606	J2041200101X	TR PNP KRA107S
Q606	J2041200102X	TR PNP DTA114YKA
Q607	J2041220102X	TR NPN DTC114YKA
Q607	J2041220201X	TR CHIP NPN KRC107
Q608	J2041200101X	TR PNP KRA107S
Q608	J2041200102X	TR PNP DTA114YKA
Q611	J2041220102X	TR NPN DTC114YKA
Q611	J2041220201X	TR CHIP NPN KRC107
Q613	J2041220102X	TR NPN DTC114YKA
Q613	J2041220201X	TR CHIP NPN KRC107

Capacitors

CC602	2026729091	CCCFMIN 100N0F +80
CC604	2026729091	CCCFMIN 100N0F +80
CC607	2026729091	CCCFMIN 100N0F +80
CC609	2026729091	CCCFMIN 100N0F +80
CF603	2026729091	CCCFMIN 100N0F +80
CF606	2026729091	CCCFMIN 100N0F +80
CF608	1105944091	CCCFMIN 10P0F +0P2
CF610	1105944091	CCCFMIN 10P0F +0P2
CF613	2026729091	CCCFMIN 100N0F +80
CF615	1105944091	CCCFMIN 10P0F +0P2

Designator	Part Number	Description
C608	1105867091	CCCFMIN 100P0F +5%
C609	1105867091	CCCFMIN 100P0F +5%
C611	1105867091	CCCFMIN 100P0F +5%
C612	1105867091	CCCFMIN 100P0F +5%
C619	1105867091	CCCFMIN 100P0F +5%
C620	1105867091	CCCFMIN 100P0F +5%
C629	1105934091	CCCFMIN 10N0F +10%
C632	1105934091	CCCFMIN 10N0F +10%
C637	1105867091	CCCFMIN 100P0F +5%
C638	1105867091	CCCFMIN 100P0F +5%
C640	1105867091	CCCFMIN 100P0F +5%
C641	1105867091	CCCFMIN 100P0F +5%
C642	1105867091	CCCFMIN 100P0F +5%
C657	2026729091	CCCFMIN 100N0F +80
C658	1105867091	CCCFMIN 100P0F +5%
C659	1105867091	CCCFMIN 100P0F +5%
C670	1105867091	CCCFMIN 100P0F +5%
C673	1105934091	CCCFMIN 10N0F +10%
C674	4043518091	CCCFMIN 47P0F +5%
C676	5088236091	CCCFMIN 33P0F +5%
C681	1105867091	CCCFMIN 100P0F +5%
C686	1105934091	CCCFMIN 10N0F +10%
C688	1105933091	CCCFMIN 2N2F +10%
C690	1105932091	CCCFMIN 1N0F +10%
C696	1105867091	CCCFMIN 100P0F +5%
C697	2026729091	CCCFMIN 100N0F +80
CC601	2026888030	CE 10U0F +20% 50.0
CC603	2026888030	CE 10U0F +20% 50.0
CC606	2026888030	CE 10U0F +20% 50.0
CF601	2026888030	CE 10U0F +20% 50.0
CF602	2026888030	CE 10U0F +20% 50.0
CF604	2026888030	CE 10U0F +20% 50.0
CF605	2026888030	CE 10U0F +20% 50.0
CF611	2026888030	CE 10U0F +20% 50.0
CF612	2026888030	CE 10U0F +20% 50.0
CS607	2026888030	CE 10U0F +20% 50.0
C601	2026888030	CE 10U0F +20% 50.0
C602	2026888030	CE 10U0F +20% 50.0
C603	2026888030	CE 10U0F +20% 50.0
C604	2026888030	CE 10U0F +20% 50.0
C605	2025267030	CE 470U0F +20% 10.
C605	2026888030	CE 10U0F +20% 50.0
C606	2025267030	CE 470U0F +20% 10.
C610	2026783030	CE 47U0F +20% 16.0
C613	2026888030	CE 10U0F +20% 50.0
C614	2026888030	CE 10U0F +20% 50.0
C615	2025267030	CE 470U0F +20% 10.
C616	2026888030	CE 10U0F +20% 50.0
C617	2026888030	CE 10U0F +20% 50.0
C618	2025267030	CE 470U0F +20% 10.
C621	2026888030	CE 10U0F +20% 50.0
C622	2026888030	CE 10U0F +20% 50.0
C623	2026888030	CE 10U0F +20% 50.0
C624	2026888030	CE 10U0F +20% 50.0
C625	2025267030	CE 470U0F +20% 10.
C625	2026888030	CE 10U0F +20% 50.0
C626	2025267030	CE 470U0F +20% 10.
C626	2026888030	CE 10U0F +20% 50.0
C627	2025267030	CE 470U0F +20% 10.
C627	2026888030	CE 10U0F +20% 50.0
C628	2025267030	CE 470U0F +20% 10.
C628	2026888030	CE 10U0F +20% 50.0
C630	2026885030	CE 2U2F +20% 50.0V
C631	2026888030	CE 10U0F +20% 50.0
C633	2026894030	CE 100U0F +20% 10.
C639	2026884030	CE 1U0F +20% 50.0V
C647	2025267030	CE 470U0F +20% 10.

Designator	Part Number	Description
C650	2025267030	CE 470U0F +20% 10.
C651	2025267030	CE 470U0F +20% 10.
C652	2025267030	CE 470U0F +20% 10.
C653	2025267030	CE 470U0F +20% 10.
C660	2026783030	CE 47U0F +20% 16.0
C661	2026783030	CE 47U0F +20% 16.0
C662	2026908030	CE 220U0F +20% 10.
C663	2026908030	CE 220U0F +20% 10.
C664	2025267030	CE 470U0F +20% 10.
C665	2025267030	CE 470U0F +20% 10.
C666	2026783030	CE 47U0F +20% 16.0
C671	2026896030	CE 330N0F +20% 50.
C672	2026894030	CE 100U0F +20% 10.
C675	2026884030	CE 1U0F +20% 50.0V
C678	J3513180270X	CC/DISC 18P 50V J
C679	2026888030	CE 10U0F +20% 50.0
C682	2026894030	CE 100U0F +20% 10.
C683	J3513300270X	CC/DISC 30PF 50V J
C683	8043459071	CC 22P0F +5% -5% 5
C684	J3513300270X	CC/DISC 30PF 50V J
C684	8043459071	CC 22P0F +5% -5% 5
C685	2026894030	CE 100U0F +20% 10.
C687	2026894030	CE 100U0F +20% 10.
C691	2026884030	CE 1U0F +20% 50.0V
C698	2026783030	CE 47U0F +20% 16.0
C699	2026783030	CE 47U0F +20% 16.0

Resistors

RC601	3094425091	RMGCFMIN 10R0 OHM
RC602	1106639091	RMGCFMIN 75R0 OHM
RC602	9057437091	RMGCFMIN 82R0 OHM
RC603	3094425091	RMGCFMIN 10R0 OHM
RC604	1106639091	RMGCFMIN 75R0 OHM
RC604	9057437091	RMGCFMIN 82R0 OHM
RC606	1106639091	RMGCFMIN 75R0 OHM
RC606	9057437091	RMGCFMIN 82R0 OHM
RC607	1106639091	RMGCFMIN 75R0 OHM
RC607	9057437091	RMGCFMIN 82R0 OHM
RC608	3094425091	RMGCFMIN 10R0 OHM
RC609	3094425091	RMGCFMIN 10R0 OHM
RC610	1106639091	RMGCFMIN 75R0 OHM
RC610	9057437091	RMGCFMIN 82R0 OHM
RC612	1106639091	RMGCFMIN 75R0 OHM
RC612	9057437091	RMGCFMIN 82R0 OHM
RC614	1106639091	RMGCFMIN 75R0 OHM
RC614	3094427091	RMGCFMIN 68R0 OHM
RF601	8044037091	RMGCFMIN 150R0 OHM
RF601	9057437091	RMGCFMIN 82R0 OHM
RF602	3094425091	RMGCFMIN 10R0 OHM
RF603	8044037091	RMGCFMIN 150R0 OHM
RF603	9057437091	RMGCFMIN 82R0 OHM
RF604	3094425091	RMGCFMIN 10R0 OHM
RF606	5088661091	RMGCFMIN 10K0 OHM
RF608	5088661091	RMGCFMIN 10K0 OHM
RF610	5088661091	RMGCFMIN 10K0 OHM
RF611	8044037091	RMGCFMIN 150R0 OHM
RF611	9057437091	RMGCFMIN 82R0 OHM
RF612	3094425091	RMGCFMIN 10R0 OHM
RF615	1106639091	RMGCFMIN 75R0 OHM
RF615	3094426091	RMGCFMIN 22R0 OHM
RF615	8044051091	RMGCFMIN 0 OHM +0%
RF616	1106639091	RMGCFMIN 75R0 OHM
RF616	3094426091	RMGCFMIN 22R0 OHM
RF616	8044051091	RMGCFMIN 0 OHM +0%
RF617	1106639091	RMGCFMIN 75R0 OHM
RF617	3094426091	RMGCFMIN 22R0 OHM
RF617	8044051091	RMGCFMIN 0 OHM +0%
RS602	1106639091	RMGCFMIN 75R0 OHM
RS602	9057437091	RMGCFMIN 82R0 OHM
RS603	1106639091	RMGCFMIN 75R0 OHM
RS603	9057437091	RMGCFMIN 82R0 OHM
RS605	1106639091	RMGCFMIN 75R0 OHM
RS605	9057437091	RMGCFMIN 82R0 OHM
RS606	1106639091	RMGCFMIN 75R0 OHM
RS606	9057437091	RMGCFMIN 82R0 OHM
RS608	1106639091	RMGCFMIN 75R0 OHM
RS608	9057437091	RMGCFMIN 82R0 OHM
RS609	1106639091	RMGCFMIN 75R0 OHM
RS609	9057437091	RMGCFMIN 82R0 OHM
RS611	1106639091	RMGCFMIN 75R0 OHM
RS611	9057437091	RMGCFMIN 82R0 OHM
RS612	1106639091	RMGCFMIN 75R0 OHM
RS612	9057437091	RMGCFMIN 82R0 OHM
RS620	1106639091	RMGCFMIN 75R0 OHM
RS620	9057437091	RMGCFMIN 82R0 OHM
RS621	1106639091	RMGCFMIN 75R0 OHM
RS621	9057437091	RMGCFMIN 82R0 OHM
RS622	1106639091	RMGCFMIN 75R0 OHM
RS622	9057437091	RMGCFMIN 82R0 OHM
RS623	1106639091	RMGCFMIN 75R0 OHM
RS623	9057437091	RMGCFMIN 82R0 OHM
R608	3094427091	RMGCFMIN 68R0 OHM
R609	8044041091	RMGCFMIN 7K5 OHM +
R610	1106644091	RMGCFMIN 3K3 OHM +
R612	8044043091	RMGCFMIN 43K0 OHM
R613	1106644091	RMGCFMIN 3K3 OHM +
R614	7043420091	RMGCFMIN 100R0 OHM
R615	2047199091	RMGCFMIN 12K0 OHM
R617	2047195091	RMGCFMIN 1K0 OHM +
R618	2047195091	RMGCFMIN 1K0 OHM +
R619	2047195091	RMGCFMIN 1K0 OHM +
R621	5088661091	RMGCFMIN 10K0 OHM
R622	5088661091	RMGCFMIN 10K0 OHM
R623	5088661091	RMGCFMIN 10K0 OHM
R624	5088661091	RMGCFMIN 10K0 OHM
R625	5088661091	RMGCFMIN 10K0 OHM
R626	5088661091	RMGCFMIN 10K0 OHM
R627	5088661091	RMGCFMIN 10K0 OHM
R628	5088661091	RMGCFMIN 10K0 OHM
R629	5088661091	RMGCFMIN 10K0 OHM
R632	1106639091	RMGCFMIN 75R0 OHM
R632	9057437091	RMGCFMIN 82R0 OHM
R633	1106639091	RMGCFMIN 75R0 OHM
R633	3094427091	RMGCFMIN 68R0 OHM
R634	5088663091	RMGCFMIN 100K0 OHM
R635	2047195091	RMGCFMIN 1K0 OHM +
R636	2047195091	RMGCFMIN 1K0 OHM +
R637	2047195091	RMGCFMIN 1K0 OHM +
R638	8044042091	RMGCFMIN 33K0 OHM
R639	3094427091	RMGCFMIN 68R0 OHM
R641	5088663091	RMGCFMIN 100K0 OHM
R642	2047195091	RMGCFMIN 1K0 OHM +
R643	1106648091	RMGCFMIN 47K0 OHM
R644	2047195091	RMGCFMIN 1K0 OHM +
R650	7043425091	RMGCFMIN 15K0 OHM
R651	2047195091	RMGCFMIN 1K0 OHM +
R652	1106644091	RMGCFMIN 3K3 OHM +
R653	3094427091	RMGCFMIN 68R0 OHM
R661	8044051091	RMGCFMIN 0 OHM +0%
R662	8044051091	RMGCFMIN 0 OHM +0%
R665	5088661091	RMGCFMIN 10K0 OHM
R666	8044043091	RMGCFMIN 43K0 OHM
R670	8044051091	RMGCFMIN 0 OHM +0%

Designator	Part Number	Description
R674	2047195091	RMGCFMIN 1K0 OHM +
R677	2047195091	RMGCFMIN 1K0 OHM +
R678	2047195091	RMGCFMIN 1K0 OHM +
R679	2047195091	RMGCFMIN 1K0 OHM +
R680	4043830091	RMGCFMIN 6K8 OHM +
R681	8044039091	RMGCFMIN 2K2 OHM +
R682	5088661091	RMGCFMIN 10K0 OHM
R683	1106646091	RMGCFMIN 8K2 OHM +
R684	1106650091	RMGCFMIN 68K0 OHM
R685	7043420091	RMGCFMIN 100R0 OHM
R687	6044442091	RMGCFMIN 150K0 OHM
R688	5088667091	RMGCFMIN 1M0 OHM +
R689	6044437091	RMGCFMIN 180R0 OHM
R690	3094427091	RMGCFMIN 68R0 OHM
R691	3094425091	RMGCFMIN 10R0 OHM
R692	3094425091	RMGCFMIN 10R0 OHM
R693	9057440091	RMGCFMIN 470R0 OHM
R694	5088667091	RMGCFMIN 1M0 OHM +
R696	4043835091	RMGCFMIN 470K0 OHM
R697	4043835091	RMGCFMIN 470K0 OHM
R698	5088661091	RMGCFMIN 10K0 OHM
R699	2047199091	RMGCFMIN 12K0 OHM
R617	1105964016	RCF 1K0 OHM +5% 25
R619	1105964016	RCF 1K0 OHM +5% 25
R640	2046946016	RCF 2K2 OHM +5% 25
R674	1105964016	RCF 1K0 OHM +5% 25
R686	5088303016	RCF 150K0 OHM +5%
R695	6044155016	RCF 330R0 OHM +5%
J025	8044051091	RMGCFMIN 0 OHM +0%
J031	8044051091	RMGCFMIN 0 OHM +0%
J032	8044051091	RMGCFMIN 0 OHM +0%
J033	8044051091	RMGCFMIN 0 OHM +0%
J036	8044051091	RMGCFMIN 0 OHM +0%
J039	8044051091	RMGCFMIN 0 OHM +0%
J040	8044051091	RMGCFMIN 0 OHM +0%
J041	8044051091	RMGCFMIN 0 OHM +0%
J045	8044051091	RMGCFMIN 0 OHM +0%
J048	8044051091	RMGCFMIN 0 OHM +0%
J052	8044051091	RMGCFMIN 0 OHM +0%
J058	8044051091	RMGCFMIN 0 OHM +0%
J063	8044051091	RMGCFMIN 0 OHM +0%
J065	8044051091	RMGCFMIN 0 OHM +0%
J067	8044051091	RMGCFMIN 0 OHM +0%
J072	8044051091	RMGCFMIN 0 OHM +0%
J073	8044051091	RMGCFMIN 0 OHM +0%
J074	8044051091	RMGCFMIN 0 OHM +0%
J076	8044051091	RMGCFMIN 0 OHM +0%
J077	8044051091	RMGCFMIN 0 OHM +0%
J079	8044051091	RMGCFMIN 0 OHM +0%
J081	8044051091	RMGCFMIN 0 OHM +0%
J083	8044051091	RMGCFMIN 0 OHM +0%
J086	8044051091	RMGCFMIN 0 OHM +0%
J089	8044051091	RMGCFMIN 0 OHM +0%
J090	8044051091	RMGCFMIN 0 OHM +0%
J091	8044051091	RMGCFMIN 0 OHM +0%
J099	8044051091	RMGCFMIN 0 OHM +0%
J101	8044051091	RMGCFMIN 0 OHM +0%
J116	8044051091	RMGCFMIN 0 OHM +0%
J121	8044051091	RMGCFMIN 0 OHM +0%

Miscellaneous

B601	J2631200022X	BEAD AX 80.5 OHM
B602	J2631200022X	BEAD AX 80.5 OHM
B603	J2631200022X	BEAD AX 80.5 OHM
CN602	J4305100065X	CNT ASSY 4P 380MM
CN603	J4305100064X	CNT ASSY 4P 250MM
CP601	J4423331600X	CNT PLUG BD'BD 2.0
CP602	J4420030840X	CNT PLUG 2.0 ST 8P
G001	J4305100030X	CNT ASSY 1P 100MM
JA601	J44312000100	JACK RCA+S GNDCAP
JA602	J44312000100	JACK RCA+S GNDCAP
JA603	J44312000100	JACK RCA+S GNDCAP
JA604	J44312000100	JACK RCA+S GNDCAP
JA605	J44312000100	JACK RCA+S GNDCAP
JA606	J44312000100	JACK RCA+S GNDCAP
JA607	J44312000100	JACK RCA+S GNDCAP
J034	J2631200012X	BEAD AXIAL 6MM
J050	J2631200012X	BEAD AXIAL 6MM
J051	J2631200012X	BEAD AXIAL 6MM
J052	J2631200012X	BEAD AXIAL 6MM
X601	J3913010065X	CRYS 17.734475MHZ
X601	J3913010075X	CRYS 14.31818MHZ
TBD	J2616222020X	COIL LAL02 22UH K
TBD1	J2616247020X	COIL 47UH
L601	J2616222020X	COIL LAL02 22UH K
L602	J2616222020X	COIL LAL02 22UH K
L603	J2616222020X	COIL LAL02 22UH K

Processor (Input) PCB

Semiconductors

Q732	J2021120003X	FET RA/TAP 2SK117Y
Q704	J2021060001X	TR NPN KTD1302 B
Q705	J2021060001X	TR NPN KTD1302 B
Q706	J2021200102X	TR PNP DTA114TS SP
Q707	J2021200102X	TR PNP DTA114TS SP
Q708	J2021060001X	TR NPN KTD1302 B
Q709	J2021060001X	TR NPN KTD1302 B
Q713	J2021060001X	TR NPN KTD1302 B
Q714	J2021060001X	TR NPN KTD1302 B
Q715	J2021200102X	TR PNP DTA114TS SP
Q716	J2021060001X	TR NPN KTD1302 B
Q717	J2021060001X	TR NPN KTD1302 B
Q718	J2021200102X	TR PNP DTA114TS SP
Q719	J2021060001X	TR NPN KTD1302 B
Q720	J2021060001X	TR NPN KTD1302 B
Q721	J2021200102X	TR PNP DTA114TS SP
Q722	J2021060001X	TR NPN KTD1302 B
Q723	J2021060001X	TR NPN KTD1302 B
Q724	J2021200102X	TR PNP DTA114TS SP
Q725	J2021200102X	TR PNP DTA114TS SP
Q727	J2021060001X	TR NPN KTD1302 B
Q729	J2021060001X	TR NPN KTD1302 B
Q730	J2021200102X	TR PNP DTA114TS SP
Q731	J2021220402X	TR NPN DTC114TS SP
Q732	J2021120003X	FET RA/TAP 2SK117Y
Q733	J2021200102X	TR PNP DTA114TS SP
Q734	J2021220402X	TR NPN DTC114TS SP
IC701	J2115206007X	IC TC9273N-007
IC702	J2115206007X	IC TC9273N-007
IC703	J2115006001X	IC VOL TC9459F SOP
IC704	J2121005001X	IC SW KIC9162AF SO
IC705	J2121005002X	IC SW KIC9163AF SO
IC706	J2115006002X	IC VOL TC9482F SOP
IC707	J2110012004X	IC OPAMP NJM2068
IC708	J2110012004X	IC OPAMP NJM2068
IC709	J2110012004X	IC OPAMP NJM2068
IC710	J2110012004X	IC OPAMP NJM2068
IC711	J2110012004X	IC OPAMP NJM2068
IC712	J2110012004X	IC OPAMP NJM2068
IC713	J2110012004X	IC OPAMP NJM2068
IC714	J2110012004X	IC OPAMP NJM2068

Designator	Part Number	Description
IC715	J2110012004X	IC OPAMP NJM2068
IC716	J2110012004X	IC OPAMP NJM2068
IC717	J2110012004X	IC OPAMP NJM2068
IC718	J2110012004X	IC OPAMP NJM2068
IC719	J2110012005X	IC AMP NJM4556AM D
IC720	J2110012004X	IC OPAMP NJM2068
IC721	J2110012004X	IC OPAMP NJM2068
IC722	J2110012004X	IC OPAMP NJM2068
Q701	J2021220801X	TR NPN KTD1304
Q702	J2021220801X	TR NPN KTD1304
Q703	J2041200101X	TR PNP KRA107S
Q703	J2041200102X	TR PNP DTA114YKA
Q704	J2021220801X	TR NPN KTD1304
Q705	J2021220801X	TR NPN KTD1304
Q706	J2041200101X	TR PNP KRA107S
Q706	J2041200102X	TR PNP DTA114YKA
Q707	J2041200101X	TR PNP KRA107S
Q707	J2041200102X	TR PNP DTA114YKA
Q708	J2021220801X	TR NPN KTD1304
Q709	J2021220801X	TR NPN KTD1304
Q710	J2021220801X	TR NPN KTD1304
Q711	J2021220801X	TR NPN KTD1304
Q712	J2041200101X	TR PNP KRA107S
Q712	J2041200102X	TR PNP DTA114YKA
Q713	J2021220801X	TR NPN KTD1304
Q714	J2021220801X	TR NPN KTD1304
Q715	J2041200101X	TR PNP KRA107S
Q715	J2041200102X	TR PNP DTA114YKA
Q716	J2021220801X	TR NPN KTD1304
Q717	J2021220801X	TR NPN KTD1304
Q718	J2041200101X	TR PNP KRA107S
Q718	J2041200102X	TR PNP DTA114YKA
Q719	J2021220801X	TR NPN KTD1304
Q720	J2021220801X	TR NPN KTD1304
Q721	J2041200101X	TR PNP KRA107S
Q721	J2041200102X	TR PNP DTA114YKA
Q722	J2021220801X	TR NPN KTD1304
Q723	J2021220801X	TR NPN KTD1304
Q724	J2041200101X	TR PNP KRA107S
Q724	J2041200102X	TR PNP DTA114YKA
Q725	J2041200101X	TR PNP KRA107S
Q725	J2041200102X	TR PNP DTA114YKA
Q727	J2021220801X	TR NPN KTD1304
Q729	J2021220801X	TR NPN KTD1304
Q730	J2041200101X	TR PNP KRA107S
Q730	J2041200102X	TR PNP DTA114YKA
Q731	J2041220102X	TR NPN DTC114YKA
Q731	J2041220201X	TR CHIP NPN KRC107
Q733	J2041200101X	TR PNP KRA107S
Q733	J2041200102X	TR PNP DTA114YKA
Q734	J2041220102X	TR NPN DTC114YKA
Q734	J2041220201X	TR PNP KRA107S
Q735	J2041200102X	TR PNP DTA114YKA
Q736	J2041200101X	TR PNP KRA107S
Q736	J2041200102X	TR PNP DTA114YKA

Capacitors

Designator	Part Number	Description
C709	J3470910030X	CE RA/TAP 10UF 16V
C710	2026783030	CE 47U0F +20% 16.0
C711	J3470910030X	CE RA/TAP 10UF 16V
C714	J3470910030X	CE RA/TAP 10UF 16V
C715	2026783030	CE 47U0F +20% 16.0
C716	J3470910030X	CE RA/TAP 10UF 16V
C723	J3470910030X	CE RA/TAP 10UF 16V
C724	2026783030	CE 47U0F +20% 16.0
C725	J3470910030X	CE RA/TAP 10UF 16V
C728	J3470910030X	CE RA/TAP 10UF 16V
C729	2026783030	CE 47U0F +20% 16.0
C730	J3470910030X	CE RA/TAP 10UF 16V
C764	2026783030	CE 47U0F +20% 16.0
C765	2026783030	CE 47U0F +20% 16.0
C768	2026783030	CE 47U0F +20% 16.0
C769	2026783030	CE 47U0F +20% 16.0
C770	2026783030	CE 47U0F +20% 16.0
C771	2026783030	CE 47U0F +20% 16.0
C773	2026783030	CE 47U0F +20% 16.0
C774	2026783030	CE 47U0F +20% 16.0
C782	J3470910030X	CE RA/TAP 10UF 16V
C783	2026783030	CE 47U0F +20% 16.0
C784	J3470910030X	CE RA/TAP 10UF 16V
C787	J3470910030X	CE RA/TAP 10UF 16V
C788	2026783030	CE 47U0F +20% 16.0
C789	J3470910030X	CE RA/TAP 10UF 16V
C792	J3470910030X	CE RA/TAP 10UF 16V
C795	2026783030	CE 47U0F +20% 16.0
C796	J3470910030X	CE RA/TAP 10UF 16V
C797	2026783030	CE 47U0F +20% 16.0
C798	2026783030	CE 47U0F +20% 16.0
C799	2026783030	CE 47U0F +20% 16.0
C800	J3470910030X	CE RA/TAP 10UF 16V
C801	J3470910030X	CE RA/TAP 10UF 16V
C802	J3470910030X	CE RA/TAP 10UF 16V
C804	J3470910030X	CE RA/TAP 10UF 16V
C805	J3470910030X	CE RA/TAP 10UF 16V
C807	2026783030	CE 47U0F +20% 16.0
C808	J3470910030X	CE RA/TAP 10UF 16V
C809	J3470910030X	CE RA/TAP 10UF 16V
C811	2026783030	CE 47U0F +20% 16.0
C813	J3470910030X	CE RA/TAP 10UF 16V
C814	J3470910030X	CE RA/TAP 10UF 16V
C816	2026783030	CE 47U0F +20% 16.0
C818	J3470910030X	CE RA/TAP 10UF 16V
C819	J3470910030X	CE RA/TAP 10UF 16V
C821	2026783030	CE 47U0F +20% 16.0
C822	J3470910030X	CE RA/TAP 10UF 16V
C823	J3470910030X	CE RA/TAP 10UF 16V
C825	2026783030	CE 47U0F +20% 16.0
C826	J3470910030X	CE RA/TAP 10UF 16V
C827	J3470910030X	CE RA/TAP 10UF 16V
C829	2026783030	CE 47U0F +20% 16.0
C831	J3470910030X	CE RA/TAP 10UF 16V
C832	J3470910030X	CE RA/TAP 10UF 16V
C834	2026783030	CE 47U0F +20% 16.0
C836	J3470910030X	CE RA/TAP 10UF 16V
C837	J3470910030X	CE RA/TAP 10UF 16V
C839	2026783030	CE 47U0F +20% 16.0
C841	J3470910030X	CE RA/TAP 10UF 16V
C842	J3470910030X	CE RA/TAP 10UF 16V
C844	2026783030	CE 47U0F +20% 16.0
C846	J3470910030X	CE RA/TAP 10UF 16V
C847	J3470910030X	CE RA/TAP 10UF 16V
C849	2026783030	CE 47U0F +20% 16.0
C851	J3470910030X	CE RA/TAP 10UF 16V
C852	J3470910030X	CE RA/TAP 10UF 16V
C854	2026783030	CE 47U0F +20% 16.0
C856	J3470910030X	CE RA/TAP 10UF 16V
C857	J3470910030X	CE RA/TAP 10UF 16V
C859	2026783030	CE 47U0F +20% 16.0
C861	J3470133111X	CE 330U 6V3 M 6.3*
C862	J3470910030X	CE RA/TAP 10UF 16V
C864	2026783030	CE 47U0F +20% 16.0
C866	J3470133111X	CE 330U 6V3 M 6.3*
C867	2026783030	CE 47U0F +20% 16.0

Designator	Part Number	Description
C709	J3470910030X	CE RA/TAP 10UF 16V
C710	2026783030	CE 47U0F +20% 16.0
C711	J3470910030X	CE RA/TAP 10UF 16V
C714	J3470910030X	CE RA/TAP 10UF 16V
C715	2026783030	CE 47U0F +20% 16.0
C716	J3470910030X	CE RA/TAP 10UF 16V
C723	J3470910030X	CE RA/TAP 10UF 16V
C724	2026783030	CE 47U0F +20% 16.0
C725	J3470910030X	CE RA/TAP 10UF 16V
C728	J3470910030X	CE RA/TAP 10UF 16V
C729	2026783030	CE 47U0F +20% 16.0
C730	J3470910030X	CE RA/TAP 10UF 16V
C741	J3470910030X	CE RA/TAP 10UF 16V
C742	2026783030	CE 47U0F +20% 16.0
C743	J3470910030X	CE RA/TAP 10UF 16V
C744	J3470910030X	CE RA/TAP 10UF 16V
C745	2026783030	CE 47U0F +20% 16.0
C746	J3470910030X	CE RA/TAP 10UF 16V
C747	J3470910030X	CE RA/TAP 10UF 16V
C749	2026783030	CE 47U0F +20% 16.0
C751	J3470910030X	CE RA/TAP 10UF 16V
C752	J3470910030X	CE RA/TAP 10UF 16V
C754	2026783030	CE 47U0F +20% 16.0
C756	J3470910030X	CE RA/TAP 10UF 16V
C757	2026783030	CE 47U0F +20% 16.0
C758	2026783030	CE 47U0F +20% 16.0
C760	2026783030	CE 47U0F +20% 16.0
C761	2026783030	CE 47U0F +20% 16.0
C764	2026783030	CE 47U0F +20% 16.0
C765	2026783030	CE 47U0F +20% 16.0
C768	2026783030	CE 47U0F +20% 16.0
C769	2026783030	CE 47U0F +20% 16.0
C770	2026783030	CE 47U0F +20% 16.0
C771	2026783030	CE 47U0F +20% 16.0
C773	2026783030	CE 47U0F +20% 16.0
C774	2026783030	CE 47U0F +20% 16.0
C776	J3470910030X	CE RA/TAP 10UF 16V
C777	2026783030	CE 47U0F +20% 16.0
C778	J3470910030X	CE RA/TAP 10UF 16V
C779	J3470910030X	CE RA/TAP 10UF 16V
C780	2026783030	CE 47U0F +20% 16.0
C781	J3470910030X	CE RA/TAP 10UF 16V
C782	J3470910030X	CE RA/TAP 10UF 16V
C783	2026783030	CE 47U0F +20% 16.0
C784	J3470910030X	CE RA/TAP 10UF 16V
C787	J3470910030X	CE RA/TAP 10UF 16V
C788	2026783030	CE 47U0F +20% 16.0
C789	J3470910030X	CE RA/TAP 10UF 16V
C792	J3470910030X	CE RA/TAP 10UF 16V
C795	2026783030	CE 47U0F +20% 16.0
C796	J3470910030X	CE RA/TAP 10UF 16V
C797	2026783030	CE 47U0F +20% 16.0
C798	2026783030	CE 47U0F +20% 16.0
C799	2026783030	CE 47U0F +20% 16.0
C800	J3470910030X	CE RA/TAP 10UF 16V
C801	J3470910030X	CE RA/TAP 10UF 16V
C802	J3470910030X	CE RA/TAP 10UF 16V
C804	J3470910030X	CE RA/TAP 10UF 16V
C805	J3470910030X	CE RA/TAP 10UF 16V
C807	2026783030	CE 47U0F +20% 16.0
C808	J3470910030X	CE RA/TAP 10UF 16V
C809	J3470910030X	CE RA/TAP 10UF 16V
C811	2026783030	CE 47U0F +20% 16.0
C813	J3470910030X	CE RA/TAP 10UF 16V
C814	J3470910030X	CE RA/TAP 10UF 16V
C816	2026783030	CE 47U0F +20% 16.0
C818	J3470910030X	CE RA/TAP 10UF 16V
C819	J3470910030X	CE RA/TAP 10UF 16V
C821	2026783030	CE 47U0F +20% 16.0
C822	J3470910030X	CE RA/TAP 10UF 16V
C823	J3470910030X	CE RA/TAP 10UF 16V
C825	2026783030	CE 47U0F +20% 16.0
C826	J3470910030X	CE RA/TAP 10UF 16V
C827	J3470910030X	CE RA/TAP 10UF 16V
C829	2026783030	CE 47U0F +20% 16.0
C831	J3470910030X	CE RA/TAP 10UF 16V
C832	J3470910030X	CE RA/TAP 10UF 16V
C834	2026783030	CE 47U0F +20% 16.0
C836	J3470910030X	CE RA/TAP 10UF 16V
C837	J3470910030X	CE RA/TAP 10UF 16V
C839	2026783030	CE 47U0F +20% 16.0
C841	J3470910030X	CE RA/TAP 10UF 16V
C842	J3470910030X	CE RA/TAP 10UF 16V
C844	2026783030	CE 47U0F +20% 16.0
C846	J3470910030X	CE RA/TAP 10UF 16V
C847	J3470910030X	CE RA/TAP 10UF 16V
C849	2026783030	CE 47U0F +20% 16.0
C851	J3470910030X	CE RA/TAP 10UF 16V
C852	J3470910030X	CE RA/TAP 10UF 16V
C854	2026783030	CE 47U0F +20% 16.0
C856	J3470910030X	CE RA/TAP 10UF 16V
C857	J3470910030X	CE RA/TAP 10UF 16V
C859	2026783030	CE 47U0F +20% 16.0
C861	J3470133111X	CE 330U 6V3 M 6.3*
C862	J3470910030X	CE RA/TAP 10UF 16V
C864	2026783030	CE 47U0F +20% 16.0
C866	J3470133111X	CE 330U 6V3 M 6.3*
C867	2026783030	CE 47U0F +20% 16.0
C701	1105867091	CCCFMIN 100P0F +5%
C702	1105867091	CCCFMIN 100P0F +5%
C703	1105867091	CCCFMIN 100P0F +5%
C704	1105867091	CCCFMIN 100P0F +5%
C705	1105867091	CCCFMIN 100P0F +5%
C706	1105867091	CCCFMIN 100P0F +5%
C707	1105867091	CCCFMIN 100P0F +5%
C708	1105867091	CCCFMIN 100P0F +5%
C712	1105867091	CCCFMIN 100P0F +5%
C713	1105867091	CCCFMIN 100P0F +5%
C717	1105867091	CCCFMIN 100P0F +5%
C718	1105867091	CCCFMIN 100P0F +5%
C719	1105867091	CCCFMIN 100P0F +5%
C720	1105867091	CCCFMIN 100P0F +5%
C721	1105867091	CCCFMIN 100P0F +5%
C722	1105867091	CCCFMIN 100P0F +5%
C726	1105867091	CCCFMIN 100P0F +5%
C727	1105867091	CCCFMIN 100P0F +5%
C731	1105867091	CCCFMIN 100P0F +5%
C732	1105867091	CCCFMIN 100P0F +5%
C733	1105867091	CCCFMIN 100P0F +5%
C734	1105867091	CCCFMIN 100P0F +5%
C735	1105867091	CCCFMIN 100P0F +5%
C736	1105867091	CCCFMIN 100P0F +5%
C737	1105867091	CCCFMIN 100P0F +5%
C738	1105867091	CCCFMIN 100P0F +5%
C739	1105867091	CCCFMIN 100P0F +5%
C740	1105867091	CCCFMIN 100P0F +5%
C750	5088236091	CCCFMIN 33P0F +5%
C755	5088236091	CCCFMIN 33P0F +5%
C759	1105867091	CCCFMIN 100P0F +5%
C762	1105867091	CCCFMIN 100P0F +5%
C763	1105867091	CCCFMIN 100P0F +5%
C767	1105867091	CCCFMIN 100P0F +5%
C772	1105867091	CCCFMIN 100P0F +5%
C775	1105867091	CCCFMIN 100P0F +5%

Designator	Part Number	Description
C793	1105933091	CCCFMIN 2N2F +10%
C794	1105933091	CCCFMIN 2N2F +10%
C812	5088236091	CCCFMIN 33P0F +5%
C817	5088236091	CCCFMIN 100P0F +5%
C824	1105867091	CCCFMIN 100P0F +5%
C828	1105867091	CCCFMIN 100P0F +5%
C830	5088236091	CCCFMIN 33P0F +5%
C833	1105867091	CCCFMIN 33P0F +5%
C838	1105867091	CCCFMIN 100P0F +5%
C840	5088236091	CCCFMIN 33P0F +5%
C843	1105867091	CCCFMIN 100P0F +5%
C845	5088236091	CCCFMIN 33P0F +5%
C848	1105867091	CCCFMIN 100P0F +5%
C850	1105933091	CCCFMIN 2N2F +10%
C853	1105867091	CCCFMIN 100P0F +5%
C855	5088236091	CCCFMIN 33P0F +5%
C858	8043682091	CCCFMIN 680P0F +10
C860	8043682091	CCCFMIN 680P0F +10
C863	8043682091	CCCFMIN 680P0F +10
C865	8043682091	CCCFMIN 680P0F +10
C868	1105867091	CCCFMIN 100P0F +5%
C869	1105867091	CCCFMIN 100P0F +5%
C870	1105867091	CCCFMIN 100P0F +5%
C871	1105867091	CCCFMIN 100P0F +5%

Resistors

Designator	Part Number	Description
R701	9057440091	RMGCFMIN 470R0 OHM
R702	4043835091	RMGCFMIN 470K0 OHM
R703	9057440091	RMGCFMIN 470R0 OHM
R704	4043835091	RMGCFMIN 470K0 OHM
R705	9057440091	RMGCFMIN 470R0 OHM
R706	4043835091	RMGCFMIN 470K0 OHM
R707	9057440091	RMGCFMIN 470R0 OHM
R708	4043835091	RMGCFMIN 470K0 OHM
R709	7043420091	RMGCFMIN 100R0 OHM
R710	9057440091	RMGCFMIN 470R0 OHM
R711	2047202091	RMGCFMIN 180K0 OHM
R712	5088663091	RMGCFMIN 100K0 OHM
R713	2047195091	RMGCFMIN 1K0 OHM +
R714	9057440091	RMGCFMIN 470R0 OHM
R715	2047202091	RMGCFMIN 180K0 OHM
R716	5088663091	RMGCFMIN 100K0 OHM
R717	2047195091	RMGCFMIN 100R0 OHM
R719	8044039091	RMGCFMIN 2K2 OHM +
R720	8044039091	RMGCFMIN 2K2 OHM +
R721	9057440091	RMGCFMIN 470R0 OHM
R722	4043835091	RMGCFMIN 470K0 OHM
R723	9057440091	RMGCFMIN 470R0 OHM
R724	4043835091	RMGCFMIN 470K0 OHM
R725	8044039091	RMGCFMIN 2K2 OHM +
R726	8044039091	RMGCFMIN 2K2 OHM +
R727	7043420091	RMGCFMIN 100R0 OHM
R728	9057440091	RMGCFMIN 470R0 OHM
R729	2047202091	RMGCFMIN 180K0 OHM
R730	5088663091	RMGCFMIN 100K0 OHM
R731	2047195091	RMGCFMIN 1K0 OHM +
R732	9057440091	RMGCFMIN 470R0 OHM
R733	2047202091	RMGCFMIN 180K0 OHM
R734	5088663091	RMGCFMIN 100K0 OHM
R735	2047195091	RMGCFMIN 1K0 OHM +
R736	7043420091	RMGCFMIN 100R0 OHM
R737	9057440091	RMGCFMIN 470R0 OHM
R738	4043835091	RMGCFMIN 470K0 OHM
R739	9057440091	RMGCFMIN 470K0 OHM
R741	9057440091	RMGCFMIN 470R0 OHM
R742	4043835091	RMGCFMIN 470K0 OHM
R743	9057440091	RMGCFMIN 470R0 OHM
R744	4043835091	RMGCFMIN 100R0 OHM
R746	9057440091	RMGCFMIN 470R0 OHM
R747	1106648091	RMGCFMIN 47K0 OHM
R748	5088663091	RMGCFMIN 100K0 OHM
R749	9057440091	RMGCFMIN 470R0 OHM
R750	1106648091	RMGCFMIN 47K0 OHM
R751	5088663091	RMGCFMIN 100K0 OHM
R752	7043420091	RMGCFMIN 100R0 OHM
R753	7043420091	RMGCFMIN 100R0 OHM
R754	9057440091	RMGCFMIN 470R0 OHM
R756	5088663091	RMGCFMIN 100K0 OHM
R757	2047195091	RMGCFMIN 1K0 OHM +
R758	5088660091	RMGCFMIN 5K1 OHM +
R759	5088663091	RMGCFMIN 100K0 OHM
R760	9057440091	RMGCFMIN 470R0 OHM
R761	5088663091	RMGCFMIN 100K0 OHM
R762	2047195091	RMGCFMIN 1K0 OHM +
R763	5088660091	RMGCFMIN 5K1 OHM +
R764	5088663091	RMGCFMIN 100K0 OHM
R765	7043420091	RMGCFMIN 100R0 OHM
R766	8044039091	RMGCFMIN 2K2 OHM +
R767	8044039091	RMGCFMIN 2K2 OHM +
R768	2047195091	RMGCFMIN 1K0 OHM +
R769	2047195091	RMGCFMIN 1K0 OHM +
R770	7043420091	RMGCFMIN 100R0 OHM
R771	9057440091	RMGCFMIN 470R0 OHM
R772	4043835091	RMGCFMIN 470K0 OHM
R773	5088663091	RMGCFMIN 100K0 OHM
R774	9057440091	RMGCFMIN 470R0 OHM
R775	4043835091	RMGCFMIN 470K0 OHM
R776	5088663091	RMGCFMIN 100K0 OHM
R778	7043420091	RMGCFMIN 100R0 OHM
R779	8044039091	RMGCFMIN 2K2 OHM +
R780	8044039091	RMGCFMIN 2K2 OHM +
R781	7043420091	RMGCFMIN 100R0 OHM
R782	7043420091	RMGCFMIN 100R0 OHM
R783	2047195091	RMGCFMIN 1K0 OHM +
R784	2047195091	RMGCFMIN 1K0 OHM +
R785	2047195091	RMGCFMIN 1K0 OHM +
R786	2047195091	RMGCFMIN 1K0 OHM +
R787	2047195091	RMGCFMIN 1K0 OHM +
R788	2047195091	RMGCFMIN 1K0 OHM +
R789	7043420091	RMGCFMIN 100R0 OHM
R790	7043420091	RMGCFMIN 100R0 OHM
R791	7043420091	RMGCFMIN 100R0 OHM
R792	7043420091	RMGCFMIN 100R0 OHM
R793	2047195091	RMGCFMIN 1K0 OHM +
R794	2047195091	RMGCFMIN 1K0 OHM +
R795	2047195091	RMGCFMIN 1K0 OHM +
R796	2047195091	RMGCFMIN 1K0 OHM +
R797	2047195091	RMGCFMIN 1K0 OHM +
R798	2047195091	RMGCFMIN 1K0 OHM +
R799	7043420091	RMGCFMIN 100R0 OHM
R800	7043420091	RMGCFMIN 100R0 OHM
R801	7043420091	RMGCFMIN 100R0 OHM
R802	7043420091	RMGCFMIN 100R0 OHM
R803	2047195091	RMGCFMIN 1K0 OHM +
R804	2047195091	RMGCFMIN 1K0 OHM +
R805	2047195091	RMGCFMIN 1K0 OHM +
R806	7043420091	RMGCFMIN 100R0 OHM
R807	7043420091	RMGCFMIN 100R0 OHM
R808	2047195091	RMGCFMIN 1K0 OHM +
R809	2047195091	RMGCFMIN 1K0 OHM +
R810	2047195091	RMGCFMIN 1K0 OHM +
R811	7043420091	RMGCFMIN 100R0 OHM
R812	9057440091	RMGCFMIN 470R0 OHM

Designator	Part Number	Description
R813	2047202091	RMGCFMIN 180K0 OHM
R814	5088663091	RMGCFMIN 100K0 OHM
R815	2047195091	RMGCFMIN 1K0 OHM +
R816	9057440091	RMGCFMIN 470R0 OHM
R817	2047202091	RMGCFMIN 180K0 OHM
R818	5088663091	RMGCFMIN 100K0 OHM
R819	2047195091	RMGCFMIN 1K0 OHM +
R820	7043420091	RMGCFMIN 100R0 OHM
R821	8044039091	RMGCFMIN 2K2 OHM +
R822	8044039091	RMGCFMIN 2K2 OHM +
R823	3094434091	RMGCFMIN 27K0 OHM
R823	5088661091	RMGCFMIN 10K0 OHM
R830	1106648091	RMGCFMIN 47K0 OHM
R831	9057440091	RMGCFMIN 470R0 OHM
R832	5088663091	RMGCFMIN 100K0 OHM
R833	8044039091	RMGCFMIN 2K2 OHM +
R834	8044040091	RMGCFMIN 5K6 OHM +
R835	5088663091	RMGCFMIN 100K0 OHM
R836	7043420091	RMGCFMIN 100R0 OHM
R837	7043420091	RMGCFMIN 100R0 OHM
R838	8044048091	RMGCFMIN 3M3 OHM +
R839	7043420091	RMGCFMIN 100R0 OHM
R840	7043420091	RMGCFMIN 100R0 OHM
R841	5088663091	RMGCFMIN 100K0 OHM
R842	2047199091	RMGCFMIN 12K0 OHM
R843	2047199091	RMGCFMIN 12K0 OHM
R844	2047199091	RMGCFMIN 12K0 OHM
R845	1106644091	RMGCFMIN 3K3 OHM +
R846	1106644091	RMGCFMIN 3K3 OHM +
R847	5088663091	RMGCFMIN 100K0 OHM
R848	2047199091	RMGCFMIN 12K0 OHM
R849	2047199091	RMGCFMIN 12K0 OHM
R850	2047199091	RMGCFMIN 12K0 OHM
R851	1106644091	RMGCFMIN 3K3 OHM +
R852	1106644091	RMGCFMIN 3K3 OHM +
R853	5088663091	RMGCFMIN 100K0 OHM
R854	8044039091	RMGCFMIN 2K2 OHM +
R855	8044039091	RMGCFMIN 2K2 OHM +
R856	8044039091	RMGCFMIN 2K2 OHM +
R857	8044039091	RMGCFMIN 2K2 OHM +
R858	8044039091	RMGCFMIN 2K2 OHM +
R859	8044039091	RMGCFMIN 2K2 OHM +
R860	3094432091	RMGCFMIN 9K1 OHM +
R861	3094432091	RMGCFMIN 9K1 OHM +
R861	9057443091	RMGCFMIN 18K0 OHM
R862	9057443091	RMGCFMIN 18K0 OHM
R863	9057443091	RMGCFMIN 18K0 OHM
R864	2047192091	RMGCFMIN 220R0 OHM
R865	8044039091	RMGCFMIN 2K2 OHM +
R866	8044039091	RMGCFMIN 2K2 OHM +
R867	7043420091	RMGCFMIN 100R0 OHM
R868	7043420091	RMGCFMIN 100R0 OHM
R869	7043420091	RMGCFMIN 100R0 OHM
R870	7043420091	RMGCFMIN 100R0 OHM
R871	7043420091	RMGCFMIN 100R0 OHM
R872	7043420091	RMGCFMIN 100R0 OHM
R873	7043420091	RMGCFMIN 100R0 OHM
R874	7043420091	RMGCFMIN 100R0 OHM
R875	7043420091	RMGCFMIN 100R0 OHM
R876	7043420091	RMGCFMIN 100R0 OHM
R878	7043420091	RMGCFMIN 100R0 OHM
R879	7043420091	RMGCFMIN 100R0 OHM
R880	7043420091	RMGCFMIN 100R0 OHM
R881	7043420091	RMGCFMIN 100R0 OHM
R882	9057440091	RMGCFMIN 470R0 OHM
R883	2047202091	RMGCFMIN 180K0 OHM
R884	5088663091	RMGCFMIN 100K0 OHM
R885	9057440091	RMGCFMIN 470R0 OHM
R886	2047202091	RMGCFMIN 180K0 OHM
R887	5088663091	RMGCFMIN 100K0 OHM
R888	9057440091	RMGCFMIN 470R0 OHM
R889	2047202091	RMGCFMIN 180K0 OHM
R890	2047195091	RMGCFMIN 1K0 OHM +
R891	8044040091	RMGCFMIN 5K6 OHM +
R892	5088663091	RMGCFMIN 100K0 OHM
R893	9057440091	RMGCFMIN 470R0 OHM
R894	2047202091	RMGCFMIN 180K0 OHM
R895	2047195091	RMGCFMIN 1K0 OHM +
R896	8044040091	RMGCFMIN 5K6 OHM +
R897	5088663091	RMGCFMIN 100K0 OHM
R898	9057440091	RMGCFMIN 470R0 OHM
R899	5088663091	RMGCFMIN 100K0 OHM
R901	8044040091	RMGCFMIN 5K6 OHM +
R902	5088663091	RMGCFMIN 100K0 OHM
R903	2047195091	RMGCFMIN 1K0 OHM +
R904	9057440091	RMGCFMIN 470R0 OHM
R905	5088663091	RMGCFMIN 100K0 OHM
R907	8044040091	RMGCFMIN 5K6 OHM +
R908	5088663091	RMGCFMIN 100K0 OHM
R909	2047195091	RMGCFMIN 1K0 OHM +
R910	9057440091	RMGCFMIN 470R0 OHM
R911	5088663091	RMGCFMIN 100K0 OHM
R912	2047195091	RMGCFMIN 1K0 OHM +
R913	8044040091	RMGCFMIN 5K6 OHM +
R914	5088663091	RMGCFMIN 100K0 OHM
R915	2047195091	RMGCFMIN 1K0 OHM +
R916	9057440091	RMGCFMIN 470R0 OHM
R917	5088663091	RMGCFMIN 100K0 OHM
R918	2047195091	RMGCFMIN 1K0 OHM +
R919	5088661091	RMGCFMIN 10K0 OHM
R920	5088663091	RMGCFMIN 100K0 OHM
R921	2047195091	RMGCFMIN 1K0 OHM +
R922	9057440091	RMGCFMIN 470R0 OHM
R923	5088663091	RMGCFMIN 100K0 OHM
R924	2047195091	RMGCFMIN 1K0 OHM +
R925	8044040091	RMGCFMIN 5K6 OHM +
R926	5088663091	RMGCFMIN 100K0 OHM
R927	2047195091	RMGCFMIN 1K0 OHM +
R928	9057440091	RMGCFMIN 470R0 OHM
R929	5088663091	RMGCFMIN 100K0 OHM
R930	2047195091	RMGCFMIN 1K0 OHM +
R931	2047196091	RMGCFMIN 1K8 OHM +
R931	4043829091	RMGCFMIN 1K5 OHM +
R931	8044039091	RMGCFMIN 2K2 OHM +
R932	5088663091	RMGCFMIN 100K0 OHM
R933	2047192091	RMGCFMIN 220R0 OHM
R934	9057440091	RMGCFMIN 470R0 OHM
R935	3094434091	RMGCFMIN 27K0 OHM
R936	5088663091	RMGCFMIN 100K0 OHM
R937	2047195091	RMGCFMIN 1K0 OHM +
R938	2047196091	RMGCFMIN 1K8 OHM +
R938	4043829091	RMGCFMIN 1K5 OHM +
R938	8044039091	RMGCFMIN 2K2 OHM +
R939	5088663091	RMGCFMIN 100K0 OHM
R940	2047192091	RMGCFMIN 220R0 OHM
R941	3094432091	RMGCFMIN 9K1 OHM +
R942	9057440091	RMGCFMIN 470R0 OHM
R943	2047202091	RMGCFMIN 180K0 OHM
R944	5088663091	RMGCFMIN 100K0 OHM
R945	9057440091	RMGCFMIN 470R0 OHM
R946	2047202091	RMGCFMIN 180K0 OHM
R947	5088663091	RMGCFMIN 100K0 OHM
R948	3094434091	RMGCFMIN 27K0 OHM
R949	2047192091	RMGCFMIN 220R0 OHM

Designator	Part Number	Description
R950	9057440091	RMGCFMIN 470R0 OHM
R951	2047195091	RMGCFMIN 1K0 OHM +
R952	2047195091	RMGCFMIN 1K0 OHM +
R953	5088663091	RMGCFMIN 100K0 OHM
R954	8044040091	RMGCFMIN 5K6 OHM +
R955	5088663091	RMGCFMIN 100K0 OHM
R956	3094432091	RMGCFMIN 9K1 OHM +
R956	9057443091	RMGCFMIN 18K0 OHM
R957	2047195091	RMGCFMIN 1K0 OHM +
R958	2047195091	RMGCFMIN 1K0 OHM +
R959	2047195091	RMGCFMIN 1K0 OHM +
R960	2047195091	RMGCFMIN 1K0 OHM +
R961	2047195091	RMGCFMIN 1K0 OHM +
R962	2047195091	RMGCFMIN 1K0 OHM +
R963	5088655091	RMGCFMIN 560R0 OHM
R964	5088655091	RMGCFMIN 560R0 OHM
R965	9057440091	RMGCFMIN 470R0 OHM
R966	9057440091	RMGCFMIN 470R0 OHM
R967	3094434091	RMGCFMIN 27K0 OHM
R968	3094434091	RMGCFMIN 27K0 OHM
R969	9057443091	RMGCFMIN 18K0 OHM
R970	9057443091	RMGCFMIN 18K0 OHM
JUM10	8044051091	RMGCFMIN 0 OHM +0%
JUM10	8044051091	RMGCFMIN 0 OHM +0%
JUM12	8044051091	RMGCFMIN 0 OHM +0%
JUM12	8044051091	RMGCFMIN 0 OHM +0%
JUM15	8044051091	RMGCFMIN 0 OHM +0%
JUM15	8044051091	RMGCFMIN 0 OHM +0%
JUM15	8044051091	RMGCFMIN 0 OHM +0%
JUM18	8044051091	RMGCFMIN 0 OHM +0%
JUM19	8044051091	RMGCFMIN 0 OHM +0%
JUM19	8044051091	RMGCFMIN 0 OHM +0%
JUM20	8044051091	RMGCFMIN 0 OHM +0%
JUM20	8044051091	RMGCFMIN 0 OHM +0%
JUM21	8044051091	RMGCFMIN 0 OHM +0%
JUM24	8044051091	RMGCFMIN 0 OHM +0%
JUM24	8044051091	RMGCFMIN 0 OHM +0%
JUM24	8044051091	RMGCFMIN 0 OHM +0%
JUM26	8044051091	RMGCFMIN 0 OHM +0%
JUM26	8044051091	RMGCFMIN 0 OHM +0%
JUM27	8044051091	RMGCFMIN 0 OHM +0%
JUM27	8044051091	RMGCFMIN 0 OHM +0%
JUM27	8044051091	RMGCFMIN 0 OHM +0%
JUM27	8044051091	RMGCFMIN 0 OHM +0%
JUM27	8044051091	RMGCFMIN 0 OHM +0%
JUM5	8044051091	RMGCFMIN 0 OHM +0%
JUM50	8044051091	RMGCFMIN 0 OHM +0%
JUM51	8044051091	RMGCFMIN 0 OHM +0%
JUM52	8044051091	RMGCFMIN 0 OHM +0%
JUM53	8044051091	RMGCFMIN 0 OHM +0%
JUM85	8044051091	RMGCFMIN 0 OHM +0%
JUM9	8044051091	RMGCFMIN 0 OHM +0%
JUM90	8044051091	RMGCFMIN 0 OHM +0%
JUM92	8044051091	RMGCFMIN 0 OHM +0%

Miscellaneous

CN408	J4423331500X	CNT 2.O 35237-1510
CN409	J4423331500X	CNT 2.O 35237-1510
CN410	J4423331500X	CNT 2.O 35237-1510
CN411	J4423331500X	CNT 2.O 35237-1510
CP205	J4420030440X	CNT PLUG 4P 2.0MM
CP206	J4420031040X	CNT PLUG 2.0 10P
CP403	J4420030340X	CNT PLUG 2.0 ST 3P
CP404	J4420030740X	CNT PLUG 2.0ST 7P
CP405	J4420031240X	CNT PLUG12P 2.0MM
JK701	J44302401201	JACK RCA 4P S
JK701	J44306000101	JACK RCA 6P GND W/
JK702	J44302401201	JACK RCA 4P S
JK703	J44302001401	JACK RCA 2P WR JW1
JK703	J44302401201	JACK RCA 4P S

DSP PCB

Semiconductors

D003	J2244010104X	DIODE CHIP 1SS355
D004	J2244010104X	DIODE CHIP 1SS355
D005	J2244010104X	DIODE CHIP 1SS355
D008	J2244010104X	DIODE CHIP 1SS355
IC01	J2129012001X	C CLK NJU6324M
IC04	55172540AVR510	IC EPROM AT27LV020
IC05	J2135326005X	IC CS493263-CL PLC
IC06	J2133926005X	IC DAC CS4391-KS S
IC07	J2133926005X	IC DAC CS4391-KS S
IC08	J2133926005X	IC DAC CS4391-KS S
IC09	J2133926002X	IC ADC CS5360-KS
IC10	J2116007001X	IC 74HCU04M1R HEX
IC11	J2116007001X	IC 74HCU04M1R HEX
IC12	J2116007001X	IC 74HCU04M1R HEX
IC13	J2142032005X	IC 74VHC153MX
IC14	J2136926001X	IC DIR CS8414-CS
IC15	J2141004002X	IC BU4094 SOP16
IC16	J2141004001X	IC BU4051 SOP16
IC17	J2142032006X	IC 74VHC157MX
IC18	J2142032002X	IC TC74VHC244MX
IC19	J2142032002X	IC TC74VHC244MX
IC20	J2110012004X	IC OPAMP NJM2068
IC21	J2110012004X	IC OPAMP NJM2068
IC22	J2110012004X	IC OPAMP NJM2068
IC23	J2121012002X	IC SW NJU201AM
IC24	J2110012004X	IC OPAMP NJM2068
IC25	J2110012004X	IC OPAMP NJM2068
IC28	J2110012004X	IC OPAMP NJM2068
Q005	J2041220102X	TR NPN DTC114YKA
Q005	J2041220201X	TR CHIP NPN KRC107
Q006	J2041220102X	TR NPN DTC114YKA
Q006	J2041220201X	TR CHIP NPN KRC107
Q024	J2041220102X	TR NPN DTC114YKA
Q024	J2041220201X	TR CHIP NPN KRC107
D009	J2244010104X	DIODE CHIP 1SS355
IC02	J2142032001X	IC F/F 74VHC574MX
IC03	J2142032001X	IC F/F 74VHC574MX

Capacitors

C112	2025256030	CE 220U0F +20% 6.3
C148	20269180AM	CE 1MI0F +20% 6.3V
C149	20269180AM	CE 1MI0F +20% 6.3V
C150	20269180AM	CE 1MI0F +20% 6.3V
C020	J3640683220X	CMP 0.068U 63V J
C031	2026884030	CE 1U0F +20% 50.0V
C032	2026884030	CE 1U0F +20% 50.0V
C056	2026885030	CE 2U2F +20% 50.0V
C068	J3470910030X	CE RA/TAP 10UF 16V
C069	J3470910030X	CE RA/TAP 10UF 16V
C070	J3470910030X	CE RA/TAP 10UF 16V
C071	J3470910030X	CE RA/TAP 10UF 16V
C080	J3470910030X	CE RA/TAP 10UF 16V
C081	J3470910030X	CE RA/TAP 10UF 16V
C082	J3470910030X	CE RA/TAP 10UF 16V
C083	J3470910030X	CE RA/TAP 10UF 16V
C092	J3470910030X	CE RA/TAP 10UF 16V

Designator	Part Number	Description
C093	J3470910030X	CE RA/TAP 10UF 16V
C094	J3470910030X	CE RA/TAP 10UF 16V
C095	J3470910030X	CE RA/TAP 10UF 16V
C110	J3470910030X	CE RA/TAP 10UF 16V
C111	J3470910030X	CE RA/TAP 10UF 16V
C114	2026884030	CE 1U0F +20% 50.0V
C115	2026884030	CE 1U0F +20% 50.0V
C116	2026884030	CE 1U0F +20% 50.0V
C117	2026884030	CE 1U0F +20% 50.0V
C118	2026884030	CE 1U0F +20% 50.0V
C119	2026884030	CE 1U0F +20% 50.0V
C144	J3470910030X	CE RA/TAP 10UF 16V
C145	J3470910030X	CE RA/TAP 10UF 16V
C146	J3470910030X	CE RA/TAP 10UF 16V
C151	2026902030	CE 100U0F +20% 16.
C152	2026902030	CE 100U0F +20% 16.
C153	2026783030	CE 47U0F +20% 16.0
C154	2026783030	CE 47U0F +20% 16.0
C155	J3470910030X	CE RA/TAP 10UF 16V
C156	J3470910030X	CE RA/TAP 10UF 16V
C157	J3470910030X	CE RA/TAP 10UF 16V
C158	J3470910030X	CE RA/TAP 10UF 16V
C159	J3470910030X	CE RA/TAP 10UF 16V
C160	J3470910030X	CE RA/TAP 10UF 16V
C164	2026783030	CE 47U0F +20% 16.0
C165	2026783030	CE 47U0F +20% 16.0
C167	2026783030	CE 47U0F +20% 16.0
C168	2026783030	CE 47U0F +20% 16.0
C003	1105934091	CCCFMIN 10N0F +10%
C004	1105934091	CCCFMIN 10N0F +10%
C010	6044108091	CCCFMIN 22P0F +5%
C011	1105934091	CCCFMIN 10N0F +10%
C019	2026729091	CCCFMIN 100N0F +80
C021	4043518091	CCCFMIN 47P0F +5%
C023	4043518091	CCCFMIN 47P0F +5%
C024	4043518091	CCCFMIN 47P0F +5%
C025	4043518091	CCCFMIN 47P0F +5%
C028	4043518091	CCCFMIN 47P0F +5%
C055	4043518091	CCCFMIN 47P0F +5%
C057	2026732091	CCCFMIN 220N0F +80
C060	2047195091	RMGCFMIN 1K0 OHM +
C062	1105864091	CCCFMIN 27P0F +5%
C067	4043518091	CCCFMIN 47P0F +5%
C072	3093923091	CCCFMIN 2N7F +10%
C073	3093923091	CCCFMIN 2N7F +10%
C074	1105871091	CCCFMIN 560P0F +5%
C075	3093923091	CCCFMIN 2N7F +10%
C076	3093923091	CCCFMIN 2N7F +10%
C077	1105871091	CCCFMIN 560P0F +5%
C078	1105871091	CCCFMIN 560P0F +5%
C079	1105871091	CCCFMIN 560P0F +5%
C084	3093923091	CCCFMIN 2N7F +10%
C085	3093923091	CCCFMIN 2N7F +10%
C086	1105871091	CCCFMIN 560P0F +5%
C087	3093923091	CCCFMIN 2N7F +10%
C088	3093923091	CCCFMIN 2N7F +10%
C089	1105871091	CCCFMIN 560P0F +5%
C090	1105871091	CCCFMIN 560P0F +5%
C091	1105871091	CCCFMIN 560P0F +5%
C096	3093923091	CCCFMIN 2N7F +10%
C097	3093923091	CCCFMIN 2N7F +10%
C098	1105871091	CCCFMIN 560P0F +5%
C099	2046934091	CCCFMIN 4N7F +10%
C100	2046934091	CCCFMIN 4N7F +10%
C101	1105932091	CCCFMIN 1N0F +10%
C102	1105871091	CCCFMIN 560P0F +5%
C103	1105932091	CCCFMIN 1N0F +10%
C104	1105933091	CCCFMIN 2N2F +10%
C105	1105933091	CCCFMIN 2N2F +10%
C106	1105867091	CCCFMIN 100P0F +5%
C107	1105867091	CCCFMIN 100P0F +5%
C108	1105867091	CCCFMIN 100P0F +5%
C109	1105867091	CCCFMIN 100P0F +5%
C120	2026729091	CCCFMIN 100N0F +80
C121	2026729091	CCCFMIN 100N0F +80
C122	2026729091	CCCFMIN 100N0F +80
C136	2026729091	CCCFMIN 100N0F +80
C138	1105867091	CCCFMIN 100P0F +5%
C139	1105867091	CCCFMIN 100P0F +5%
C163	7043420091	RMGCFMIN 100R0 OHM
C178	2026729091	CCCFMIN 100N0F +80
C001	6044108091	CCCFMIN 22P0F +5%
C002	6044108091	CCCFMIN 22P0F +5%
C005	2026729091	CCCFMIN 100N0F +80
C006	2026729091	CCCFMIN 100N0F +80
C007	2026729091	CCCFMIN 100N0F +80
C008	2026729091	CCCFMIN 100N0F +80
C009	2026729091	CCCFMIN 100N0F +80
C012	2026729091	CCCFMIN 100N0F +80
C013	2026729091	CCCFMIN 100N0F +80
C014	2026729091	CCCFMIN 100N0F +80
C015	2026729091	CCCFMIN 100N0F +80
C016	2026729091	CCCFMIN 100N0F +80
C017	2026729091	CCCFMIN 100N0F +80
C018	2026729091	CCCFMIN 100N0F +80
C022	2026729091	CCCFMIN 100N0F +80
C026	2026729091	CCCFMIN 100N0F +80
C029	2026729091	CCCFMIN 100N0F +80
C030	2026729091	CCCFMIN 100N0F +80
C033	2026729091	CCCFMIN 100N0F +80
C034	2026729091	CCCFMIN 100N0F +80
C035	2026729091	CCCFMIN 100N0F +80
C036	4043518091	CCCFMIN 47P0F +5%
C037	4043518091	CCCFMIN 47P0F +5%
C040	2026729091	CCCFMIN 100N0F +80
C041	2026729091	CCCFMIN 100N0F +80
C042	2026729091	CCCFMIN 100N0F +80
C043	2026729091	CCCFMIN 100N0F +80
C049	4043518091	CCCFMIN 47P0F +5%
C050	4043518091	CCCFMIN 47P0F +5%
C059	2026729091	CCCFMIN 100N0F +80
C061	2046897091	CCCFMIN 330P0F +5%
C063	2026729091	CCCFMIN 100N0F +80
C064	1105867091	CCCFMIN 100P0F +5%
C065	2026729091	CCCFMIN 100N0F +80
C066	2026729091	CCCFMIN 100N0F +80
C113	2026729091	CCCFMIN 100N0F +80
C123	2026729091	CCCFMIN 100N0F +80
C124	2026729091	CCCFMIN 100N0F +80
C125	2026729091	CCCFMIN 100N0F +80
C126	2026729091	CCCFMIN 100N0F +80
C127	2026729091	CCCFMIN 100N0F +80
C128	2026729091	CCCFMIN 100N0F +80
C129	2026729091	CCCFMIN 100N0F +80
C130	2026729091	CCCFMIN 100N0F +80
C131	2026729091	CCCFMIN 100N0F +80
C132	2026729091	CCCFMIN 100N0F +80
C133	2026729091	CCCFMIN 100N0F +80
C134	2026729091	CCCFMIN 100N0F +80
C135	2026729091	CCCFMIN 100N0F +80
C137	2026729091	CCCFMIN 100N0F +80
C140	2026729091	CCCFMIN 100N0F +80
C141	2026729091	CCFMIN 100N0F +80
C142	2026729091	CCCFMIN 100N0F +80

Designator	Part Number	Description
C143	2026729091	CCCFMIN 100N0F +80
C147	3093873091	CCCFMIN 220P0F +5%
C166	2026729091	CCCFMIN 100N0F +80
C169	2046897091	CCCFMIN 330P0F +5%
C170	2026729091	CCCFMIN 100N0F +80
C171	2026729091	CCCFMIN 100N0F +80
C172	2026729091	CCCFMIN 100N0F +80
C174	4043518091	CCCFMIN 47P0F +5%
C175	4043518091	CCCFMIN 47P0F +5%
C176	4043518091	CCCFMIN 47P0F +5%

Resistors

Designator	Part Number	Description
R003	1106648091	RMGCFMIN 47K0 OHM
R004	1106648091	RMGCFMIN 47K0 OHM
R005	5088655091	RMGCFMIN 560R0 OHM
R006	5088655091	RMGCFMIN 560R0 OHM
R007	8044039091	RMGCFMIN 2K2 OHM +
R008	1106648091	RMGCFMIN 47K0 OHM
R009	8044039091	RMGCFMIN 2K2 OHM +
R010	1106648091	RMGCFMIN 47K0 OHM
R011	8044040091	RMGCFMIN 5K6 OHM +
R012	3094425091	RMGCFMIN 10R0 OHM
R013	9057440091	RMGCFMIN 470R0 OHM
R014	7043420091	RMGCFMIN 100R0 OHM
R015	2047193091	RMGCFMIN 510R0 OHM
R016	7043423091	RMGCFMIN 1K2 OHM +
R017	7043423091	RMGCFMIN 1K2 OHM +
R018	5088655091	RMGCFMIN 560R0 OHM
R019	5088655091	RMGCFMIN 560R0 OHM
R020	1106639091	RMGCFMIN 75R0 OHM
R021	3094425091	RMGCFMIN 10R0 OHM
R022	1106648091	RMGCFMIN 47K0 OHM
R023	9057440091	RMGCFMIN 470R0 OHM
R024	9057440091	RMGCFMIN 470R0 OHM
R025	7043420091	RMGCFMIN 100R0 OHM
R026	2047193091	RMGCFMIN 510R0 OHM
R027	8044039091	RMGCFMIN 2K2 OHM +
R028	1106648091	RMGCFMIN 47K0 OHM
R029	8044039091	RMGCFMIN 2K2 OHM +
R030	1106648091	RMGCFMIN 47K0 OHM
R031	8044040091	RMGCFMIN 5K6 OHM +
R036	8044040091	RMGCFMIN 5K6 OHM +
R037	8044039091	RMGCFMIN 2K2 OHM +
R038	1106648091	RMGCFMIN 47K0 OHM
R039	5088663091	RMGCFMIN 100K0 OHM
R040	5088663091	RMGCFMIN 100K0 OHM
R041	2047195091	RMGCFMIN 1K0 OHM +
R042	2047195091	RMGCFMIN 1K0 OHM +
R044	8044040091	RMGCFMIN 5K6 OHM +
R045	8044040091	RMGCFMIN 5K6 OHM +
R046	5088661091	RMGCFMIN 10K0 OHM
R047	5088661091	RMGCFMIN 10K0 OHM
R048	5088660091	RMGCFMIN 5K1 OHM +
R049	9057440091	RMGCFMIN 470R0 OHM
R050	5088660091	RMGCFMIN 5K1 OHM +
R051	5088661091	RMGCFMIN 10K0 OHM
R052	5088661091	RMGCFMIN 10K0 OHM
R053	8044040091	RMGCFMIN 5K6 OHM +
R054	7043423091	RMGCFMIN 1K2 OHM +
R055	7043423091	RMGCFMIN 1K2 OHM +
R056	8044040091	RMGCFMIN 5K6 OHM +
R057	7043423091	RMGCFMIN 1K2 OHM +
R058	7043423091	RMGCFMIN 1K2 OHM +
R059	5088655091	RMGCFMIN 560R0 OHM
R060	5088655091	RMGCFMIN 560R0 OHM
R061	5088661091	RMGCFMIN 10K0 OHM
R062	5088661091	RMGCFMIN 10K0 OHM
R063	5088661091	RMGCFMIN 10K0 OHM
R064	5088661091	RMGCFMIN 10K0 OHM
R065	5088663091	RMGCFMIN 100K0 OHM
R066	5088663091	RMGCFMIN 100K0 OHM
R067	5088661091	RMGCFMIN 10K0 OHM
R068	5088661091	RMGCFMIN 10K0 OHM
R071	2047195091	RMGCFMIN 1K0 OHM +
R072	4043829091	RMGCFMIN 1K5 OHM +
R073	8044040091	RMGCFMIN 5K6 OHM +
R074	8044040091	RMGCFMIN 5K6 OHM +
R075	5088663091	RMGCFMIN 100K0 OHM
R078	5088661091	RMGCFMIN 10K0 OHM
R080	3094431091	RMGCFMIN 4K7 OHM +
R081	5088661091	RMGCFMIN 10K0 OHM
R082	5088661091	RMGCFMIN 10K0 OHM
R083	5088661091	RMGCFMIN 10K0 OHM
R084	5088661091	RMGCFMIN 10K0 OHM
R085	5088661091	RMGCFMIN 10K0 OHM
R086	5088661091	RMGCFMIN 10K0 OHM
R087	5088661091	RMGCFMIN 10K0 OHM
R088	5088661091	RMGCFMIN 10K0 OHM
R089	5088663091	RMGCFMIN 100K0 OHM
R091	8044037091	RMGCFMIN 150R0 OHM
R092	8044037091	RMGCFMIN 150R0 OHM
R093	5088661091	RMGCFMIN 10K0 OHM
R094	5088661091	RMGCFMIN 10K0 OHM
R095	5088661091	RMGCFMIN 10K0 OHM
R096	5088661091	RMGCFMIN 10K0 OHM
R097	5088661091	RMGCFMIN 10K0 OHM
R098	5088661091	RMGCFMIN 10K0 OHM
R099	8044037091	RMGCFMIN 150R0 OHM
R100	8044037091	RMGCFMIN 150R0 OHM
R101	3094433091	RMGCFMIN 20K0 OHM
R102	3094433091	RMGCFMIN 20K0 OHM
R103	2047195091	RMGCFMIN 1K0 OHM +
R104	2047195091	RMGCFMIN 1K0 OHM +
R105	5088663091	RMGCFMIN 100K0 OHM
R106	5088663091	RMGCFMIN 100K0 OHM
R107	3094431091	RMGCFMIN 4K7 OHM +
R108	3094431091	RMGCFMIN 4K7 OHM +
R109	5088661091	RMGCFMIN 10K0 OHM
R111	5088661091	RMGCFMIN 10K0 OHM
R112	3094431091	RMGCFMIN 4K7 OHM +
R113	5088661091	RMGCFMIN 10K0 OHM
R114	5088661091	RMGCFMIN 10K0 OHM
R115	2047195091	RMGCFMIN 1K0 OHM +
R116	2026729091	CCCFMIN 100N0F +80
R117	5088661091	RMGCFMIN 10K0 OHM
R118	7043423091	RMGCFMIN 1K2 OHM +
R119	3094431091	RMGCFMIN 4K7 OHM +
R120	3094431091	RMGCFMIN 4K7 OHM +
R121	7043423091	RMGCFMIN 1K2 OHM +
R122	5088655091	RMGCFMIN 560R0 OHM
R123	5088655091	RMGCFMIN 560R0 OHM
R124	2047202091	RMGCFMIN 180K0 OHM
R125	2047202091	RMGCFMIN 180K0 OHM
R126	5088660091	RMGCFMIN 5K1 OHM +
R127	5088660091	RMGCFMIN 5K1 OHM +
R128	5088660091	RMGCFMIN 5K1 OHM +
R129	5088660091	RMGCFMIN 5K1 OHM +
R130	8044040091	RMGCFMIN 5K6 OHM +
R131	7043423091	RMGCFMIN 1K2 OHM +
R132	7043423091	RMGCFMIN 1K2 OHM +
R133	8044040091	RMGCFMIN 5K6 OHM +
R134	7043423091	RMGCFMIN 1K2 OHM +
R135	7043423091	RMGCFMIN 1K2 OHM +

Designator	Part Number	Description
R136	5088655091	RMGCFMIN 560R0 OHM
R137	5088655091	RMGCFMIN 560R0 OHM
R138	8044040091	RMGCFMIN 5K6 OHM +
R139	8044040091	RMGCFMIN 5K6 OHM +
R141	1106648091	RMGCFMIN 47K0 OHM
R143	8044040091	RMGCFMIN 5K6 OHM +
R144	8044040091	RMGCFMIN 5K6 OHM +
R145	8044040091	RMGCFMIN 5K6 OHM +
R146	8044040091	RMGCFMIN 5K6 OHM +
R147	8044040091	RMGCFMIN 5K6 OHM +
R148	7043423091	RMGCFMIN 1K2 OHM +
R149	7043423091	RMGCFMIN 1K2 OHM +
R151	7043420091	RMGCFMIN 100R0 OHM
R152	7043420091	RMGCFMIN 100R0 OHM
R159	9057440091	RMGCFMIN 470R0 OHM
R160	2047195091	RMGCFMIN 1K0 OHM +
R161	6044435091	RMGCFMIN 47R0 OHM
R162	3094425091	RMGCFMIN 10R0 OHM
R163	3094425091	RMGCFMIN 10R0 OHM
R164	9057440091	RMGCFMIN 470R0 OHM
R165	9057440091	RMGCFMIN 470R0 OHM
R166	2047202091	RMGCFMIN 180K0 OHM
R167	2047202091	RMGCFMIN 180K0 OHM
R168	9057440091	RMGCFMIN 470R0 OHM
R169	9057440091	RMGCFMIN 470R0 OHM
R170	2047195091	RMGCFMIN 1K0 OHM +
R171	3094428091	RMGCFMIN 120R0 OHM
R172	9057440091	RMGCFMIN 470R0 OHM
R173	5088655091	RMGCFMIN 560R0 OHM
R174	5088655091	RMGCFMIN 560R0 OHM
R175	8044037091	RMGCFMIN 150R0 OHM
R176	5088655091	RMGCFMIN 560R0 OHM
R177	5088655091	RMGCFMIN 560R0 OHM
R178	5088655091	RMGCFMIN 560R0 OHM
R179	5088655091	RMGCFMIN 560R0 OHM
R180	5088655091	RMGCFMIN 560R0 OHM
R181	5088655091	RMGCFMIN 560R0 OHM
R182	5088655091	RMGCFMIN 560R0 OHM
R183	7043420091	RMGCFMIN 100R0 OHM
R184	5088655091	RMGCFMIN 560R0 OHM
R001	1106639091	RMGCFMIN 75R0 OHM
R002	1106639091	RMGCFMIN 75R0 OHM
R043	1511259091	RMGCFMIN 3R3 OHM +
R069	7043420091	RMGCFMIN 100R0 OHM
R070	7043420091	RMGCFMIN 100R0 OHM
R090	1511259091	RMGCFMIN 3R3 OHM +
R150	1035519091	RMGCFMIN 2R2 OHM +
J002	8044051091	RMGCFMIN 0 OHM +0%
J003	8044051091	RMGCFMIN 0 OHM +0%
J004	8044051091	RMGCFMIN 0 OHM +0%

Miscellaneous

J001	J2611447822X	COIL CHIP 0.47UH K
L001	J2611433022X	COIL CHIP 33UH K F
L002	J2611433022X	COIL CHIP 33UH K F
L003	J2611433022X	COIL CHIP 33UH K F
L004	J2611433022X	COIL CHIP 33UH K F
BD05	J2631300204X	BEAD CHIP/TAP HB-1
BD16	J2631300204X	BEAD CHIP/TAP HB-1
BD18	J2631300204X	BEAD CHIP/TAP HB-1
BD61	J2631300204X	BEAD CHIP/TAP HB-1
CN05	J4305100060X	CNT ASSY 5P 480MM
COIL1	J2831020205X	TRANS PULSE 110UH
COIL2	J2831020305X	TRANS PULSE 110UH
CP01	J4422212140X	FPC PLUG 21P 1.25M
CP02	J4423331100X	CNT PLUG BD'BD 2.0
CP03	J4423331600X	CNT PLUG BD'BD 2.0
CP04	J4420130540X	CNT 2.0MM 5P

Designator	Part Number	Description
JAC1	J2123806001X	FIBER TORX178B
JAC2	J2123806001X	FIBER TORX178B
JAC3	J44302001100	JACK RA 2P OO JC02
JAC4	J2123806002X	FIBER OPT TRANS
JAC5	J44301000700	JACK RCA 1P O W/GN
JAC6	J2123806001X	FIBER TORX178B
JAC7	J44301000600	JACK RCA 1P O W/GN
OSC1	J3914010025X	CRY 12.28MHZ
RLY1	J5511610020X	RELAY TSC-105L3H
W001	J4305100020X	LUG WIRE 1P 100MM
BD01	J2631300204X	BEAD CHIP/TAP HB-1
BD02	J2631300204X	BEAD CHIP/TAP HB-1
BD04	J2631300204X	BEAD CHIP/TAP HB-1
BD10	J2631300204X	BEAD CHIP/TAP HB-1
BD11	J2631300204X	BEAD CHIP/TAP HB-1
BD12	J2631300204X	BEAD CHIP/TAP HB-1
BD15	J2631300224X	BEAD CHIP/TAP,HH-1
BD23	J2631300204X	BEAD CHIP/TAP HB-1
BD24	J2631300204X	BEAD CHIP/TAP HB-1
BD25	J2631300204X	BEAD CHIP/TAP HB-1
BD26	J2631300204X	BEAD CHIP/TAP HB-1
BD27	J2631300204X	BEAD CHIP/TAP HB-1
BD28	J2631300204X	BEAD CHIP/TAP HB-1
BD29	J2631300204X	BEAD CHIP/TAP HB-1
BD30	J2631300204X	BEAD CHIP/TAP HB-1
BD31	J2631300204X	BEAD CHIP/TAP HB-1
BD32	J2631300204X	BEAD CHIP/TAP HB-1
BD34	J2631300204X	BEAD CHIP/TAP HB-1
BD38	J2631300204X	BEAD CHIP/TAP HB-1
BD41	J2631300204X	BEAD CHIP/TAP HB-1
BD42	J2631300204X	BEAD CHIP/TAP HB-1
BD43	J2631300204X	BEAD CHIP/TAP HB-1
BD44	J2631300204X	BEAD CHIP/TAP HB-1
BD45	J2631300204X	BEAD CHIP/TAP HB-1
BD57	J2631300204X	BEAD CHIP/TAP HB-1
BD58	J2631300204X	BEAD CHIP/TAP HB-1
BD62	J2631300204X	BEAD CHIP/TAP HB-1
BD71	J2631300204X	BEAD CHIP/TAP HB-1

Main PCB

Semiconductors

IC481	J2112505021X	IC 7815PI TO-220IS
IC482	J2112505018X	IC KIA7915PI TO220
IC483	J2112504001X	IC BA033T
IC484	J2112505019X	IC KIA7805PI TO220
IC485	J2112505019X	IC KIA7805PI TO220
IC486	J2112505014X	IC KIA7905PI
IC487	J2112503001X	IC REG ADJ KA33 TO
IC501	J2110212000X	IC OPAMP 2068DD
D481	J2202306007X	DIODE BU8-04F
D481	J2202376107X	DIODE BU10-04
D482	J2203336007X	DIODE W2-04F
D568	J2221244000X	DIODE RECT 1N5402S
D569	J2221244000X	DIODE RECT 1N5402S
D570	J2221244000X	DIODE RECT 1N5402S
D571	J2221244000X	DIODE RECT 1N5402S
Q425	J2021520302X	TR NPN 2SC4883A
Q426	J2021520302X	TR NPN 2SC4883A
Q433	J2021500102X	TR PNP 2SA1859A
Q434	J2021500102X	TR PNP 2SA1859A
Q435	J2021520302X	TR NPN 2SC4883A
Q436	J2021520302X	TR NPN 2SC4883A
Q437	J2002520103X	TR NPN 2SC5358-R
Q437	J2002520203X	TR NPN 2SC5198-R(1
Q438	J2002520103X	TR NPN 2SC5358-R
Q438	J2002520203X	TR NPN 2SC5198-R(1
Q439	J2002500103X	TR PNP 2SA1986-R

Designator	Part Number	Description
Q439	J2002500203X	TR PNP 2SA1941-R(1
Q440	J2002500103X	TR PNP 2SA1986-R
Q440	J2002500203X	TR PNP 2SA1941-R(1
Q513	J2021520302X	TR NPN 2SC4883A
Q517	J2021500102X	TR PNP 2SA1859A
Q518	J2021520302X	TR NPN 2SC4883A
Q519	J2002520103X	TR NPN 2SC5358-R
Q519	J2002520203X	TR NPN 2SC5198-R(1
Q520	J2002500103X	TR PNP 2SA1986-R
Q520	J2002500203X	TR PNP 2SA1941-R(1

Capacitors

C421	13076940AM	CE 470U0F +20% 63.
C422	13076940AM	CE 470U0F +20% 63.
C423	13076940AM	CE 470U0F +20% 63.
C424	13076940AM	CE 470U0F +20% 63.
C481	J34204103661	CE 10000UF 63V
C481	J3420468266X	CE 6800UF 63V
C481	J3420482266X	CAPE82 00UF63V
C482	J34204103661	CE 10000UF 63V
C482	J3420468266X	CE 6800UF 63V
C482	J3420482266X	CAPE82 00UF63V
C485	J3470122261X	CE 2200UP 35V
C486	J3470122261X	CE 2200UP 35V
C487	J3420668236X	CE SHL 6800U 16V M
C488	J3470122231X	CE 2200UF 16V
C511	13076940AM	CE 470U0F +20% 63.
C512	13076940AM	CE 470U0F +20% 63.

Resistors

R471	J3076228421X	RES MPR 0.22 5W J
R472	J3076228421X	RES MPR 0.22 5W J
R475	J3010100620X	RES OXIDE 10 1W J
R476	J3010100620X	RES OXIDE 10 1W J
R481	J3030100720X	RES 10 OHM 2W J
R482	J3030100720X	RES 10 OHM 2W J
R483	J3030100720X	RES 10 OHM 2W J
R484	J3030479720X	RES 4R7 OHM 2W J
R485	J3030479720X	RES 4R7 OHM 2W J
R486	J3030479720X	RES 4R7 OHM 2W J
R487	J3030339720X	RES OX 3R3 2W J
R536	J3076228421X	RES MPR 0.22 5W J
R538	J3010100620X	RES OXIDE 10 1W J
VR401	J3211310210X	RES SEMI 1K
VR402	J3211310210X	RES SEMI 1K
VR501	J3211310210X	RES SEMI 1K

Miscellaneous

CN401	J4420050300X	CNT ST 35313-0310
CN402	J4420040600X	CNT PLUG 2.5 6P
CN403	J4420040300X	CNT PLUG 2.5 3P
CN407	J4423230500X	CNT 2.0MM 35336-05
CN408	J4423231500X	CNT 2.0 35336-1510
CN409	J4423231500X	CNT 2.0 35336-1510
CN410	J4423231500X	CNT 2.0 35336-1510
CN411	J4423231500X	CNT 2.0 35336-1510
CN412	J4423231600X	CONNECTOR
CN413	J4423231100X	CONNECTOR
CN414	J4422112740X	FPC PLUG 27P 1.25
CN415	J4423231600X	CONNECTOR
CN416	J4420030640X	CNT PLUG 2.0 6P ST
CN417	J4420040300X	CNT PLUG 2.5 3P
CP404	J4305100067X	CNT ASSY12P 390MM
CP405	J4305100068X	CNT ASSY 10P 390+5
CP406	J4305100069X	CNT ASSY 10P 390+5
FU481	J5502220320X	FUSE 2A/125V

Designator	Part Number	Description
FU481	J5503320330X	FUSE T 250V/2.0A
FU482	J5502220320X	FUSE 2A/125V
FU482	J5503320330X	FUSE T 250V/2.0A
FU483	J5502220320X	FUSE 2A/125V
FU483	J5503320330X	FUSE T 250V/2.0A
FU484	J5502220320X	FUSE 2A/125V
FU484	J5503320330X	FUSE T 250V/2.0A
G011	J4200020000X	GND PLATE
JK401	J44301000300	JACK RCA 1P BK GND
JK401	J44301001100	JACK RCA 1P BROWN
JK402	J44302000900	JACK RCA 2P BB W/G
JK402	J44302401201	JACK RCA 4P S
JK403	J44303000500	JACK RCA 3P BBB W/
JK403	J44306000101	JACK RCA 6P GND W/
JK404	J44302401201	JACK RCA 4P S
JK405	J44302401201	JACK RCA 4P S
JK405	J44306000101	JACK RCA 6P GND W/
JP401	J44001600000	TERMINAL SCREW 6P
L401	J1451000030X	COIL-AF CHOKE .7UH
L402	J1451000030X	COIL-AF CHOKE .7UH
L501	J1451000030X	COIL-AF CHOKE .7UH
P551	J2431100002X	POSISTOR PTC
WA401	J4420040200X	CNT ST 5267-02A
WA402	J4420040200X	CNT ST 5267-02A
WA403	J4420040200X	CNT ST 5267-02A
W401	J4305100072X	CNT ASSY 1P 250MM

Surround/Standby Power Supply/ Video Component PCB

Semiconductors

Q401	J2021020701X	TR NPN KTC3200 BL
Q402	J2021020701X	TR NPN KTC3200 BL
Q403	J2021020701X	TR NPN KTC3200 BL
Q404	J2021020701X	TR NPN KTC3200 BL
Q405	J2021020701X	TR NPN KTC3200 BL
Q406	J2021020701X	TR NPN KTC3200 BL
Q407	J2021020201X	TR NPN KTC3198 BL
Q408	J2021020201X	TR NPN KTC3198 BL
Q411	J2021005101X	TR PNP KTA1268 BL
Q412	J2021005101X	TR PNP KTA1268 BL
Q413	J2021005101X	TR PNP KTA1268 BL
Q414	J2021005101X	TR PNP KTA1268 BL
Q415	J2021020701X	TR NPN KTC3200 BL
Q416	J2021020701X	TR NPN KTC3200 BL
Q417	J2021000101X	TR PNP KTA1024
Q418	J2021000101X	TR PNP KTA1024
Q419	J2021020501X	TR NPN KTC3206
Q420	J2021020501X	TR NPN KTC3206
Q421	J2021000101X	TR PNP KTA1024
Q422	J2021000101X	TR PNP KTA1024
Q423	J2021020501X	TR NPN KTC3206
Q424	J2021020501X	TR NPN KTC3206
Q427	J2021020701X	TR NPN KTC3200 BL
Q428	J2021020701X	TR NPN KTC3200 BL
Q429	J2021020501X	TR NPN KTC3206
Q430	J2021020501X	TR NPN KTC3206
Q431	J2021000101X	TR PNP KTA1024
D401	7043654016	D-SLP 1N4148 100.0
D402	7043654016	D-SLP 1N4148 100.0
D403	7043654016	D-SLP 1N4148 100.0
D404	7043654016	D-SLP 1N4148 100.0
D405	7043654016	D-SLP 1N4148 100.0
D406	7043654016	D-SLP 1N4148 100.0
D501	7043654016	D-SLP 1N4148 100.0
D502	7043654016	D-SLP 1N4148 100.0
D551	7043654016	D-SLP 1N4148 100.0
D552	7043654016	D-SLP 1N4148 100.0

Designator	Part Number	Description
D553	7043654016	D-SLP 1N4148 100.0
D554	7043654016	D-SLP 1N4148 100.0
D555	7043654016	D-SLP 1N4148 100.0
D556	7043654016	D-SLP 1N4148 100.0
D566	7043654016	D-SLP 1N4148 100.0
D567	7043654016	D-SLP 1N4148 100.0
IC390	J2116004001X	IC BA7660FS 3-CH
IC391	J2116004003X	IC BA7603F VIDEO
IC981	J2112505000X	IC KIA7805P TO-220
Q625	J2021520302X	TR NPN 2SC4883A
Q626	J2021520302X	TR NPN 2SC4883A
Q633	J2021500102X	TR PNP 2SA1859A
Q634	J2021500102X	TR PNP 2SA1859A
Q635	J2021520302X	TR NPN 2SC4883A
Q636	J2021520302X	TR NPN 2SC4883A
Q637	J2002520103X	TR NPN 2SC5358-R
Q637	J2002520203X	TR NPN 2SC5198-R(1
Q638	J2002520103X	TR NPN 2SC5358-R
Q638	J2002520203X	TR NPN 2SC5198-R(1
Q639	J2002500103X	TR PNP 2SA1986-R
Q639	J2002500203X	TR PNP 2SA1941-R(1
Q640	J2002500103X	TR PNP 2SA1986-R
Q640	J2002500203X	TR PNP 2SA1941-R(1
D691	J2202306007X	DIODE BU8-04F
D691	J2202366007X	DIODE BU6-04F
D981	2041506016	D-SR 1N4004 400.0V
D982	2041506016	D-SR 1N4004 400.0V
D983	2041506016	D-SR 1N4004 400.0V
D984	2041506016	D-SR 1N4004 400.0V
D985	2041506016	D-SR 1N4004 400.0V
D986	2041506016	D-SR 1N4004 400.0V
D989	2041506016	D-SR 1N4004 400.0V
D990	2041506016	D-SR 1N4004 400.0V
Q432	J2021000101X	TR PNP KTA1024
Q501	J2021020701X	TR NPN KTC3200 BL
Q502	J2021020701X	TR NPN KTC3200 BL
Q503	J2021020701X	TR NPN KTC3200 BL
Q504	J2021020201X	TR NPN KTC3198 BL
Q506	J2021005101X	TR PNP KTA1268 BL
Q507	J2021005101X	TR PNP KTA1268 BL
Q508	J2021020701X	TR NPN KTC3200 BL
Q509	J2021000101X	TR PNP KTA1024
Q510	J2021020501X	TR NPN KTC3206
Q511	J2021000101X	TR PNP KTA1024
Q512	J2021020501X	TR NPN KTC3206
Q514	J2021020701X	TR NPN KTC3200 BL
Q515	J2021020501X	TR NPN KTC3206
Q516	J2021000101X	TR PNP KTA1024
Q551	J2021020701X	TR NPN KTC3200 BL
Q552	J2021020701X	TR NPN KTC3200 BL
Q553	J2021020701X	TR NPN KTC3200 BL
Q554	J2021020201X	TR NPN KTC3198 BL
Q555	J2021020201X	TR NPN KTC3198 BL
Q556	J2021020201X	TR NPN KTC3198 BL
Q557	J2021000201X	TR PNP KTA1266 Y
Q558	J2021000101X	TR PNP KTA1024
Q559	J2021220001X	TR NPN KRC107M
Q559	J2021220102X	TR NPN DTC114YSA
Q561	J2021005101X	TR PNP KTA1268 BL
D601	7043654016	D-SLP 1N4148 100.0
D602	7043654016	D-SLP 1N4148 100.0
D603	7043654016	D-SLP 1N4148 100.0
D604	7043654016	D-SLP 1N4148 100.0
D681	7043654016	D-SLP 1N4148 100.0
D682	7043654016	D-SLP 1N4148 100.0
D683	7043654016	D-SLP 1N4148 100.0
D684	7043654016	D-SLP 1N4148 100.0
D685	7043654016	D-SLP 1N4148 100.0
D987	7043654016	D-SLP 1N4148 100.0
D988	7043654016	D-SLP 1N4148 100.0
D991	J2221430635X	D-ZENER .5W 30V J
D992	7043654016	D-SLP 1N4148 100.0
D994	J2221475535X	D-Z/AX 0.5W 7.5V U
D996	J2221451535X	D-ZENER .5W 5V1 J
Q601	J2021020701X	TR NPN KTC3200 BL
Q602	J2021020701X	TR NPN KTC3200 BL
Q603	J2021020701X	TR NPN KTC3200 BL
Q604	J2021020701X	TR NPN KTC3200 BL
Q605	J2021020701X	TR NPN KTC3200 BL
Q606	J2021020701X	TR NPN KTC3200 BL
Q607	J2021020201X	TR NPN KTC3198 BL
Q608	J2021020201X	TR NPN KTC3198 BL
Q611	J2021005101X	TR PNP KTA1268 BL
Q612	J2021005101X	TR PNP KTA1268 BL
Q613	J2021005101X	TR PNP KTA1268 BL
Q614	J2021005101X	TR PNP KTA1268 BL
Q615	J2021020701X	TR NPN KTC3200 BL
Q616	J2021020701X	TR NPN KTC3200 BL
Q617	J2021000101X	TR PNP KTA1024
Q618	J2021000101X	TR PNP KTA1024
Q619	J2021020501X	TR NPN KTC3206
Q620	J2021020501X	TR NPN KTC3206
Q621	J2021000101X	TR PNP KTA1024
Q622	J2021000101X	TR PNP KTA1024
Q623	J2021020501X	TR NPN KTC3206
Q624	J2021020501X	TR NPN KTC3206
Q627	J2021020701X	TR NPN KTC3200 BL
Q628	J2021020701X	TR NPN KTC3200 BL
Q629	J2021020501X	TR NPN KTC3206
Q630	J2021020501X	TR NPN KTC3206
Q631	J2021000101X	TR PNP KTA1024
Q632	J2021000101X	TR PNP KTA1024
Q681	J2021020701X	TR NPN KTC3200 BL
Q682	J2021020701X	TR NPN KTC3200 BL
Q683	J2021005101X	TR PNP KTA1268 BL
Q981	J2021005101X	TR PNP KTA1268 BL
Q982	J2021020801X	TR MPSA06 Y TO-92

Capacitors

C621	13073530AM	CE 470U0F +20% 50.
C621	13076940AM	CE 470U0F +20% 63.
C622	13073530AM	CE 470U0F +20% 50.
C622	13076940AM	CE 470U0F +20% 63.
C623	13073530AM	CE 470U0F +20% 50.
C623	13076940AM	CE 470U0F +20% 63.
C624	13073530AM	CE 470U0F +20% 50.
C624	13076940AM	CE 470U0F +20% 63.
C691	J3420447256X	CE DL 4700U 50V
C691	J3420468256X	CE 6800UF 50V
C691	J3420468266X	CE 6800UF 63V
C692	J3420447256X	CE DL 4700U 50V
C692	J3420468256X	CE 6800UF 50V
C692	J3420468266X	CE 6800UF 63V
C982	J3531472412X	CAP AC250V 472-M
C984	13073530AM	CE 470U0F +20% 50.
C989	13073530AM	CE 470U0F +20% 50.
C990	13073530AM	CE 470U0F +20% 50.
C111	2093665016	CC 100P0F +10% -10
C112	2093665016	CC 100P0F +10% -10
C113	2093665016	CC 100P0F +10% -10
C114	2093665016	CC 100P0F +10% -10
C115	2093665016	CC 100P0F +10% -10
C116	2093665016	CC 100P0F +10% -10
C401	2026888030	CE 10U0F +20% 50.0
C402	2026888030	CE 10U0F +20% 50.0
C403	1105530071	CC 68P0F +5% -5% 5
C404	1105530071	CC 68P0F +5% -5% 5

Designator	Part Number	Description
C405	2026907030	CE 100U0F +20% 25.
C406	2026907030	CE 100U0F +20% 25.
C407	2026908030	CE 220U0F +20% 10.
C408	2026908030	CE 220U0F +20% 10.
C409	3093607071	CC 12P0F +5% -5% 5
C410	3093607071	CC 12P0F +5% -5% 5
C411	6043915071	CC 33P0F +5% -5% 5
C412	6043915071	CC 33P0F +5% -5% 5
C413	2026888030	CE 10U0F +20% 50.0
C414	2026888030	CE 10U0F +20% 50.0
C415	2026888030	CE 10U0F +20% 50.0
C416	2026888030	CE 10U0F +20% 50.0
C417	J3640104320X	CP MET .1U 63V -K
C418	J3640104320X	CP MET .1U 63V -K
C419	J3640104320X	CP MET .1U 63V -K
C420	J3640104320X	CP MET .1U 63V -K
C425	1105556071	CC 3N3F +10% -10%
C426	1105556071	CC 3N3F +10% -10%
C431	J3600473330X	CP .047U 100V K
C432	J3600473330X	CP .047U 100V K
C433	J3600473330X	CP .047U 100V K
C434	2025004016	CC 220P0F +10% -10
C435	2025004016	CC 220P0F +10% -10
C436	2025004016	CC 220P0F +10% -10
C437	2025004016	CC 220P0F +10% -10
C439	2025004016	CC 220P0F +10% -10
C441	2025004016	CC 220P0F +10% -10
C443	2025004016	CC 220P0F +10% -10
C444	2025004016	CC 220P0F +10% -10
C445	2024647071	CC 100N0F +80% -20
C446	2024647071	CC 100N0F +80% -20
C483	J3640104350X	CP MET .1U 250V -M
C484	J3600473330X	CP .047U 100V K
C489	2026888030	CE 10U0F +20% 50.0
C490	2026888030	CE 10U0F +20% 50.0
C492	2026888030	CE 10U0F +20% 50.0
C494	2026888030	CE 10U0F +20% 50.0
C496	2026888030	CE 10U0F +20% 50.0
C497	2026888030	CE 10U0F +20% 50.0
C498	2026888030	CE 10U0F +20% 50.0
C501	2026888030	CE 10U0F +20% 50.0
C502	1105530071	CC 68P0F +5% -5% 5
C503	2026907030	CE 100U0F +20% 25.
C504	2026908030	CE 220U0F +20% 10.
C505	3093607071	CC 12P0F +5% -5% 5
C506	6043915071	CC 33P0F +5% -5% 5
C507	2026888030	CE 10U0F +20% 50.0
C508	2026888030	CE 10U0F +20% 50.0
C509	J3640104320X	CP MET .1U 63V -K
C510	J3640104320X	CP MET .1U 63V -K
C513	1105556071	CC 3N3F +10% -10%
C551	J3640683220X	CMP 0.068U 63V J
C552	J3640683220X	CMP 0.068U 63V J
C553	J3640683220X	CMP 0.068U 63V J
C554	J3470147121X	CE SG 470U 10V M
C555	7042852071	CC 10N0F +10% -10%
C556	7042852071	CC 10N0F +10% -10%
C558	2029347016	CC 100N0F +80% -20
C563	2029347016	CC 100N0F +80% -20
C564	J3640104350X	CP MET .1U 250V -M
C565	J3640104350X	CP MET .1U 250V -M
C566	J3600473330X	CP .047U 100V K
C567	J3600473330X	CP .047U 100V K
C568	1500213030	CE 10U0F +20% 16.0
C569	4043358071	CC 680P0F +10% -10
C570	4043358071	CC 680P0F +10% -10
C571	4043358071	CC 680P0F +10% -10
C576	2093665016	CC 100P0F +10% -10
C577	2093665016	CC 100P0F +10% -10
C582	2026783030	CE 47U0F +20% 16.0
C583	2026783030	CE 47U0F +20% 16.0
C588	1500213030	CE 10U0F +20% 16.0
C589	1500213030	CE 10U0F +20% 16.0
C374	2024647071	CC 100N0F +80% -20
C375	2026783030	CE 47U0F +20% 16.0
C376	2026902030	CE 100U0F +20% 16.
C377	2026889030	CE 22U0F +20% 25.0
C378	2026907030	CE 100U0F +20% 25.
C379	2026889030	CE 22U0F +20% 25.0
C380	2026902030	CE 100U0F +20% 16.
C381	2026889030	CE 22U0F +20% 25.0
C382	2024647071	CC 100N0F +80% -20
C383	2026783030	CE 47U0F +20% 16.0
C384	2026884030	CE 1U0F +20% 50.0V
C387	2026884030	CE 1U0F +20% 50.0V
C388	2026884030	CE 1U0F +20% 50.0V
C389	2026884030	CE 1U0F +20% 50.0V
C392	2026884030	CE 1U0F +20% 50.0V
C395	2026884030	CE 1U0F +20% 50.0V
C396	2093665016	CC 100P0F +10% -10
C397	2093665016	CC 100P0F +10% -10
C398	2093665016	CC 100P0F +10% -10
C399	2029347016	CC 100N0F +80% -20
C601	2026888030	CE 10U0F +20% 50.0
C602	2026888030	CE 10U0F +20% 50.0
C603	1105530071	CC 68P0F +5% -5% 5
C604	1105530071	CC 68P0F +5% -5% 5
C605	2026907030	CE 100U0F +20% 25.
C606	2026907030	CE 100U0F +20% 25.
C607	2026908030	CE 220U0F +20% 10.
C608	2026908030	CE 220U0F +20% 10.
C609	3093607071	CC 12P0F +5% -5% 5
C610	3093607071	CC 12P0F +5% -5% 5
C611	6043915071	CC 33P0F +5% -5% 5
C612	6043915071	CC 33P0F +5% -5% 5
C613	2026888030	CE 10U0F +20% 50.0
C614	2026888030	CE 10U0F +20% 50.0
C615	2026888030	CE 10U0F +20% 50.0
C616	2026888030	CE 10U0F +20% 50.0
C617	J3640104320X	CP MET .1U 63V -K
C618	J3640104320X	CP MET .1U 63V -K
C619	J3640104320X	CP MET .1U 63V -K
C620	J3640104320X	CP MET .1U 63V -K
C625	1105556071	CC 3N3F +10% -10%
C626	1105556071	CC 3N3F +10% -10%
C629	4043358071	CC 680P0F +10% -10
C630	4043358071	CC 680P0F +10% -10
C681	J3640683220X	CMP 0.068U 63V J
C682	J3640683220X	CMP 0.068U 63V J
C693	J3640104350X	CP MET .1U 250V -M
C694	J3640104350X	CP MET .1U 250V -M
C695	J3640104350X	CP MET .1U 250V -M
C696	1500213030	CE 10U0F +20% 16.0
C971	2026884030	CE 1U0F +20% 50.0V
C983	7042852071	CC 10N0F +10% -10%
C985	2049503016	CC 100N0F +10% -10
C986	2026884030	CE 1U0F +20% 50.0V
C987	2026888030	CE 10U0F +20% 50.0
C988	2049503016	CC 100N0F +10% -10
C991	2026901030	CE 47U0F +20% 50.0
C992	1303935030	CE 100U0F +20% 35.
C993	2049503016	CC 100N0F +10% -10
C994	2049503016	CC 100N0F +10% -10
C995	2049503016	CC 100N0F +10% -10
C997	7042852071	CC 10N0F +10% -10%
C998	7042852071	CC 10N0F +10% -10%
C999	7042852071	CC 10N0F +10% -10%

Resistors

Designator	Part Number	Description
R671	J3076228421X	RES MPR 0.22 5W J
R672	J3076228421X	RES MPR 0.22 5W J
R675	J3010100620X	RES OXIDE 10 1W J
R676	J3010100620X	RES OXIDE 10 1W J
R995	J3091335033X	RES 3.3MOHM 1/2W
R121	5088297016	RCF 470R0 OHM +5%
R122	5088297016	RCF 470R0 OHM +5%
R123	3093951016	RCF 100K0 OHM +5%
R124	3093951016	RCF 100K0 OHM +5%
R125	5088297016	RCF 470R0 OHM +5%
R126	5088297016	RCF 470R0 OHM +5%
R127	3093951016	RCF 100K0 OHM +5%
R128	3093951016	RCF 100K0 OHM +5%
R129	5088297016	RCF 470R0 OHM +5%
R130	2046946016	RCF 2K2 OHM +5% 25
R131	3093951016	RCF 100K0 OHM +5%
R132	3093951016	RCF 100K0 OHM +5%
R401	6044155016	RCF 330R0 OHM +5%
R402	6044155016	RCF 330R0 OHM +5%
R403	3093949016	RCF 33K0 OHM +5% 2
R403	8043703016	RCF 27K0 OHM +5% 2
R403	9057113016	RCF 39K0 OHM +5% 2
R404	3093949016	RCF 33K0 OHM +5% 2
R404	8043703016	RCF 27K0 OHM +5% 2
R404	9057113016	RCF 39K0 OHM +5% 2
R405	4043563016	RCF 1K5 OHM +5% 25
R406	4043563016	RCF 1K5 OHM +5% 25
R407	4043563016	RCF 1K5 OHM +5% 25
R408	4043563016	RCF 1K5 OHM +5% 25
R409	2046945016	RCF 220R0 OHM +5%
R410	2046945016	RCF 220R0 OHM +5%
R411	2046945016	RCF 220R0 OHM +5%
R412	2046945016	RCF 220R0 OHM +5%
R413	1105961016	RCF 270R0 OHM +5%
R414	1105961016	RCF 270R0 OHM +5%
R415	2046951016	RCF 43K0 OHM +5% 2
R416	2046951016	RCF 43K0 OHM +5% 2
R417	3093949016	RCF 33K0 OHM +5% 2
R417	8043703016	RCF 27K0 OHM +5% 2
R417	9057113016	RCF 39K0 OHM +5% 2
R418	3093949016	RCF 33K0 OHM +5% 2
R418	8043703016	RCF 27K0 OHM +5% 2
R418	9057113016	RCF 39K0 OHM +5% 2
R419	1105966016	RCF 2K0 OHM +5% 25
R419	8043701016	RCF 1K8 OHM +5% 25
R420	1105966016	RCF 2K0 OHM +5% 25
R420	8043701016	RCF 1K8 OHM +5% 25
R421	6044156016	RCF 560R0 OHM +5%
R422	6044156016	RCF 560R0 OHM +5%
R423	6044156016	RCF 560R0 OHM +5%
R424	6044156016	RCF 560R0 OHM +5%
R425	6044156016	RCF 560R0 OHM +5%
R426	6044156016	RCF 560R0 OHM +5%
R427	6044156016	RCF 560R0 OHM +5%
R428	6044156016	RCF 560R0 OHM +5%
R429	6044156016	RCF 560R0 OHM +5%
R430	6044156016	RCF 560R0 OHM +5%
R431	6044156016	RCF 560R0 OHM +5%
R432	6044156016	RCF 560R0 OHM +5%
R433	5088296016	RCF 150R0 OHM +5%
R434	5088296016	RCF 150R0 OHM +5%
R435	5088296016	RCF 150R0 OHM +5%
R436	5088296016	RCF 150R0 OHM +5%
R437	5088301016	RCF 15K0 OHM +5% 2
R438	5088301016	RCF 15K0 OHM +5% 2
R439	5088301016	RCF 15K0 OHM +5% 2
R440	5088301016	RCF 15K0 OHM +5% 2
R441	5088296016	RCF 150R0 OHM +5%
R442	5088296016	RCF 150R0 OHM +5%
R443	5088296016	RCF 150R0 OHM +5%
R444	5088296016	RCF 150R0 OHM +5%
R445	3093936016	RCF 10R0 OHM +5% 2
R446	3093936016	RCF 10R0 OHM +5% 2
R447	3093936016	RCF 10R0 OHM +5% 2
R448	3093936016	RCF 10R0 OHM +5% 2
R449	1105964016	RCF 1K0 OHM +5% 25
R450	1105964016	RCF 1K0 OHM +5% 25
R451	6044156016	RCF 560R0 OHM +5%
R452	6044156016	RCF 560R0 OHM +5%
R453	4043564016	RCF 4K7 OHM +5% 25
R454	4043564016	RCF 4K7 OHM +5% 25
R455	7043056016	RCF 5K6 OHM +5% 25
R456	7043056016	RCF 5K6 OHM +5% 25
R457	5088295016	RCF 100R0 OHM +5%
R458	5088295016	RCF 100R0 OHM +5%
R459	5088295016	RCF 100R0 OHM +5%
R460	5088295016	RCF 100R0 OHM +5%
R461	3093937016	RCF 15R0 OHM +5% 2
R462	3093937016	RCF 15R0 OHM +5% 2
R463	3093937016	RCF 15R0 OHM +5% 2
R464	3093937016	RCF 15R0 OHM +5% 2
R465	4043891016	RCF 2R2 OHM +5% 25
R466	4043891016	RCF 2R2 OHM +5% 25
R467	4043891016	RCF 2R2 OHM +5% 25
R468	4043891016	RCF 2R2 OHM +5% 25
R469	1105959016	RCF 82R0 OHM +5% 2
R470	1105959016	RCF 82R0 OHM +5% 2
R473	3093936016	RCF 10R0 OHM +5% 2
R474	3093936016	RCF 10R0 OHM +5% 2
R477	3093936016	RCF 10R0 OHM +5% 2
R478	3093936016	RCF 10R0 OHM +5% 2
R489	2046945016	RCF 220R0 OHM +5%
R490	1105963016	RCF 680R0 OHM +5%
R501	6044155016	RCF 330R0 OHM +5%
R502	3093949016	RCF 33K0 OHM +5% 2
R502	8043703016	RCF 27K0 OHM +5% 2
R502	9057113016	RCF 39K0 OHM +5% 2
R503	4043563016	RCF 1K5 OHM +5% 25
R504	4043563016	RCF 1K5 OHM +5% 25
R505	2046945016	RCF 220R0 OHM +5%
R506	2046945016	RCF 220R0 OHM +5%
R507	1105961016	RCF 270R0 OHM +5%
R508	2046951016	RCF 43K0 OHM +5% 2
R509	3093949016	RCF 33K0 OHM +5% 2
R509	8043703016	RCF 27K0 OHM +5% 2
R509	9057113016	RCF 39K0 OHM +5% 2
R510	1105966016	RCF 2K0 OHM +5% 25
R510	8043701016	RCF 1K8 OHM +5% 25
R511	6044156016	RCF 560R0 OHM +5%
R512	6044156016	RCF 560R0 OHM +5%
R513	6044156016	RCF 560R0 OHM +5%
R514	6044156016	RCF 560R0 OHM +5%
R515	6044156016	RCF 560R0 OHM +5%
R516	6044156016	RCF 560R0 OHM +5%
R517	5088296016	RCF 150R0 OHM +5%
R518	5088296016	RCF 150R0 OHM +5%
R519	5088301016	RCF 15K0 OHM +5% 2
R520	5088301016	RCF 15K0 OHM +5% 2
R521	5088296016	RCF 150R0 OHM +5%
R522	5088296016	RCF 150R0 OHM +5%
R523	3093936016	RCF 10R0 OHM +5% 2
R524	3093936016	RCF 10R0 OHM +5% 2
R525	1105964016	RCF 1K0 OHM +5% 25
R526	6044156016	RCF 560R0 OHM +5%
R527	4043564016	RCF 4K7 OHM +5% 25
R528	7043056016	RCF 5K6 OHM +5% 25

Designator	Part Number	Description
R529	5088295016	RCF 100R0 OHM +5%
R530	5088295016	RCF 100R0 OHM +5%
R531	3093937016	RCF 15R0 OHM +5% 2
R532	3093937016	RCF 15R0 OHM +5% 2
R533	4043891016	RCF 2R2 OHM +5% 25
R534	4043891016	RCF 2R2 OHM +5% 25
R535	1105959016	RCF 82R0 OHM +5% 2
R537	3093936016	RCF 10R0 OHM +5% 2
R539	3093936016	RCF 10R0 OHM +5% 2
R551	4043563016	RCF 1K5 OHM +5% 25
R552	4043563016	RCF 1K5 OHM +5% 25
R553	5088301016	RCF 15K0 OHM +5% 2
R554	5088301016	RCF 15K0 OHM +5% 2
R555	6044158016	RCF 22K0 OHM +5% 2
R556	6044158016	RCF 22K0 OHM +5% 2
R557	4043563016	RCF 1K5 OHM +5% 25
R558	5088301016	RCF 15K0 OHM +5% 2
R559	6044158016	RCF 22K0 OHM +5% 2
R561	7043057016	RCF 8K2 OHM +5% 25
R562	1105971016	RCF 56K0 OHM +5% 2
R563	1105971016	RCF 56K0 OHM +5% 2
R564	1105971016	RCF 56K0 OHM +5% 2
R565	9057112016	RCF 12K0 OHM +5% 2
R566	5088295016	RCF 100R0 OHM +5%
R567	3093948016	RCF 10K0 OHM +5% 2
R568	3093948016	RCF 10K0 OHM +5% 2
R569	3093948016	RCF 10K0 OHM +5% 2
R570	1105961016	RCF 270R0 OHM +5%
R571	8043703016	RCF 27K0 OHM +5% 2
R585	4043563016	RCF 1K5 OHM +5% 25
R586	4043563016	RCF 1K5 OHM +5% 25
R587	9057113016	RCF 39K0 OHM +5% 2
R588	9057113016	RCF 39K0 OHM +5% 2
R589	4043563016	RCF 1K5 OHM +5% 25
R590	9057113016	RCF 39K0 OHM +5% 2
R591	3093948016	RCF 10K0 OHM +5% 2
R592	9057113016	RCF 39K0 OHM +5% 2
R593	5088297016	RCF 470R0 OHM +5%
R594	5088297016	RCF 470R0 OHM +5%
R595	5088297016	RCF 470R0 OHM +5%
R596	5088295016	RCF 100R0 OHM +5%
R597	5088295016	RCF 100R0 OHM +5%
R606	3093951016	RCF 100K0 OHM +5%
R607	3093951016	RCF 100K0 OHM +5%
R608	1105964016	RCF 1K0 OHM +5% 25
R609	9057112016	RCF 12K0 OHM +5% 2
R610	1105964016	RCF 1K0 OHM +5% 25
R611	9057112016	RCF 12K0 OHM +5% 2
R385	7043052016	RCF 75R0 OHM +5% 2
R386	7043052016	RCF 75R0 OHM +5% 2
R387	7043052016	RCF 75R0 OHM +5% 2
R389	7043052016	RCF 75R0 OHM +5% 2
R391	7043052016	RCF 75R0 OHM +5% 2
R392	7043052016	RCF 75R0 OHM +5% 2
R393	7043052016	RCF 75R0 OHM +5% 2
R394	7043052016	RCF 75R0 OHM +5% 2
R396	7043052016	RCF 75R0 OHM +5% 2
R397	3093948016	RCF 10K0 OHM +5% 2
R398	3093948016	RCF 10K0 OHM +5% 2
R399	3093948016	RCF 10K0 OHM +5% 2
R601	6044155016	RCF 330R0 OHM +5%
R602	6044155016	RCF 330R0 OHM +5%
R603	3093949016	RCF 33K0 OHM +5% 2
R603	8043703016	RCF 27K0 OHM +5% 2
R603	9057113016	RCF 39K0 OHM +5% 2
R604	3093949016	RCF 33K0 OHM +5% 2
R604	8043703016	RCF 27K0 OHM +5% 2
R604	9057113016	RCF 39K0 OHM +5% 2
R605	4043563016	RCF 1K5 OHM +5% 25
R606	4043563016	RCF 1K5 OHM +5% 25
R607	4043563016	RCF 1K5 OHM +5% 25
R608	4043563016	RCF 1K5 OHM +5% 25
R609	2046945016	RCF 220R0 OHM +5%
R610	2046945016	RCF 220R0 OHM +5%
R612	2046945016	RCF 220R0 OHM +5%
R613	1105961016	RCF 270R0 OHM +5%
R614	1105961016	RCF 270R0 OHM +5%
R615	2046951016	RCF 43K0 OHM +5% 2
R616	2046951016	RCF 43K0 OHM +5% 2
R617	3093949016	RCF 33K0 OHM +5% 2
R617	8043703016	RCF 27K0 OHM +5% 2
R617	9057113016	RCF 39K0 OHM +5% 2
R618	3093949016	RCF 33K0 OHM +5% 2
R618	8043703016	RCF 27K0 OHM +5% 2
R618	9057113016	RCF 39K0 OHM +5% 2
R619	1105966016	RCF 2K0 OHM +5% 25
R619	8043701016	RCF 1K8 OHM +5% 25
R620	1105966016	RCF 2K0 OHM +5% 25
R620	8043701016	RCF 1K8 OHM +5% 25
R621	6044156016	RCF 560R0 OHM +5%
R622	6044156016	RCF 560R0 OHM +5%
R623	6044156016	RCF 560R0 OHM +5%
R624	6044156016	RCF 560R0 OHM +5%
R625	6044156016	RCF 560R0 OHM +5%
R626	6044156016	RCF 560R0 OHM +5%
R627	6044156016	RCF 560R0 OHM +5%
R628	6044156016	RCF 560R0 OHM +5%
R629	6044156016	RCF 560R0 OHM +5%
R630	6044156016	RCF 560R0 OHM +5%
R631	6044156016	RCF 560R0 OHM +5%
R632	6044156016	RCF 560R0 OHM +5%
R633	5088296016	RCF 150R0 OHM +5%
R634	5088296016	RCF 150R0 OHM +5%
R635	5088296016	RCF 150R0 OHM +5%
R636	5088296016	RCF 150R0 OHM +5%
R637	5088301016	RCF 15K0 OHM +5% 2
R638	5088301016	RCF 15K0 OHM +5% 2
R639	5088301016	RCF 15K0 OHM +5% 2
R640	5088301016	RCF 15K0 OHM +5% 2
R641	5088296016	RCF 150R0 OHM +5%
R642	5088296016	RCF 150R0 OHM +5%
R643	5088296016	RCF 150R0 OHM +5%
R644	5088296016	RCF 150R0 OHM +5%
R645	3093936016	RCF 10R0 OHM +5% 2
R646	3093936016	RCF 10R0 OHM +5% 2
R647	3093936016	RCF 10R0 OHM +5% 2
R648	3093936016	RCF 10R0 OHM +5% 2
R649	1105964016	RCF 1K0 OHM +5% 25
R650	1105964016	RCF 1K0 OHM +5% 25
R651	6044156016	RCF 560R0 OHM +5%
R652	6044156016	RCF 560R0 OHM +5%
R653	4043564016	RCF 4K7 OHM +5% 25
R654	4043564016	RCF 4K7 OHM +5% 25
R655	7043056016	RCF 5K6 OHM +5% 25
R656	7043056016	RCF 5K6 OHM +5% 25
R657	5088295016	RCF 100R0 OHM +5%
R658	5088295016	RCF 100R0 OHM +5%
R659	5088295016	RCF 100R0 OHM +5%
R660	5088295016	RCF 100R0 OHM +5%
R661	3093937016	RCF 15R0 OHM +5% 2
R662	3093937016	RCF 15R0 OHM +5% 2
R663	3093937016	RCF 15R0 OHM +5% 2
R664	3093937016	RCF 15R0 OHM +5% 2
R665	4043891016	RCF 2R2 OHM +5% 25
R666	4043891016	RCF 2R2 OHM +5% 25
R667	4043891016	RCF 2R2 OHM +5% 25
R668	4043891016	RCF 2R2 OHM +5% 25
R669	1105959016	RCF 82R0 OHM +5% 2

Designator	Part Number	Description
R670	1105959016	RCF 82R0 OHM +5% 2
R673	3093936016	RCF 10R0 OHM +5% 2
R674	3093936016	RCF 10R0 OHM +5% 2
R677	3093936016	RCF 10R0 OHM +5% 2
R678	3093936016	RCF 10R0 OHM +5% 2
R679	5088297016	RCF 470R0 OHM +5%
R680	5088297016	RCF 470R0 OHM +5%
R681	4043563016	RCF 1K5 OHM +5% 25
R682	4043563016	RCF 1K5 OHM +5% 25
R683	5088301016	RCF 15K0 OHM +5% 2
R684	5088301016	RCF 15K0 OHM +5% 2
R685	6044158016	RCF 22K0 OHM +5% 2
R686	6044158016	RCF 22K0 OHM +5% 2
R687	4043563016	RCF 1K5 OHM +5% 25
R688	4043563016	RCF 1K5 OHM +5% 25
R689	9057113016	RCF 39K0 OHM +5% 2
R690	9057113016	RCF 39K0 OHM +5% 2
R691	3093948016	RCF 10K0 OHM +5% 2
R692	9057113016	RCF 39K0 OHM +5% 2
R971	3093948016	RCF 10K0 OHM +5% 2
R972	3093951016	RCF 100K0 OHM +5%
R981	2047253016	RCF 4R7 OHM +5% 25
R982	2046946016	RCF 2K2 OHM +5% 25
R983	1105964016	RCF 1K0 OHM +5% 25
R984	1105967016	RCF 2K7 OHM +5% 25
R985	3093938016	RCF 22R0 OHM +5% 2
R986	2046946016	RCF 2K2 OHM +5% 25
R987	6044156016	RCF 560R0 OHM +5%
R988	1106757016	RCF 1R0 OHM +5% 25
R989	1106757016	RCF 1R0 OHM +5% 25
R993	7043056016	RCF 5K6 OHM +5% 25
VR601	J3211310210X	RES SEMI 1K
VR602	J3211310210X	RES SEMI 1K

Miscellaneous

RL981	J5511300010X	RELAY 10A 12V
RL981	J5511300020X	RELAY SDT-S-112DMR
	J60530006000	HEAT SINK 16X7.5X3
	J5636140010X	SCREW
	J90400038000	LABEL FUSE SB5A/12
AC981	J1561000006X	AC OUTLET CE
AC981	J44900000110	AC OUTLET A204D004
AC981	J44901000100	AC OUTLET A304D007
BKT1	J60300028000	BKT GROUND ET 0.5T
BKT2	J60300028000	BKT GROUND ET 0.5T
CA81	J3926100000X	X-C .1U PCX2 335M
CN606	J4305100066X	CNT ASSY 3P 900MM
CP390	J4420030440X	CNT PLUG 4P 2.0MM
FU981	J5502250320X	FUSE SB 5A/125V
FU981	J5502263320X	FUSE SB 6.3A/125V
FU981	J5502270320X	FUSE SB 7A/125V
FU981	J5503331330X	FUSE 250V 3.15A
FU981	J5503340330X	FUSET 4A/250V
FU981	J5503350330X	FUSE 5A/250V
H012	J4305100026X	LUG WIRE 1P 200MM
H020	J4305100026X	LUG WIRE 1P 200MM
JA290	J44309000000	JACK RCA 9P GNDCAP
JK601	J44001400000	TERMINAL SCREW 4P
L601	J1451000030X	COIL-AF CHOKE .7UH
L602	J1451000030X	COIL-AF CHOKE .7UH
T981	55175760	ST'BY TRANS
WA601	J4420040200X	CNT ST 5267-02A
WA602	J4420040200X	CNT ST 5267-02A
WA603	J4420050300X	CNT ST 35313-0310
WA625	J4420030440X	CNT PLUG 4P 2.0MM
WA981	J4420060260X	CONNECTOR
WA983	J4420060200X	CONNECTOR
WA985	J4420060200X	CONNECTOR

Designator	Part Number	Description
WA986	J4420040700X	CNT PLUG 2.5 7P
W301	J4305100073X	CNT ASSY 1P 80MM #
W302	J4305100073X	CNT ASSY 1P 80MM #
FH401	J4210020001X	FUSE CLIP 0.3T
FH402	J4210020001X	FUSE CLIP 0.3T
FH403	J4210020001X	FUSE CLIP 0.3T
FH404	J4210020001X	FUSE CLIP 0.3T
FH405	J4210020001X	FUSE CLIP 0.3T
FH406	J4210020001X	FUSE CLIP 0.3T
FH407	J4210020001X	FUSE CLIP 0.3T
FH408	J4210020001X	FUSE CLIP 0.3T
FH981	J4210020001X	FUSE CLIP 0.3T

AVR510 COMPLETE TUNER PCB ASS'Y PART# J4099100170X

SONY

CXP82832/82840/82852/82860

CMOS 8-bit Single Chip Microcomputer

Description

The CXP82832/82840/82852/82860 is a CMOS 8-bit single chip microcomputer integrating on a single chip an A/D converter, serial interface, timer/counter, time base timer, capture timer/counter, fluorescent display panel controller/driver, remote control reception circuit, and PWM output besides the basic configurations of 8-bit CPU, ROM, RAM, and I/O port.

The CXP82832/82840/82852/82860 also provides sleep/stop function that enables lower power consumption.

100 pin QFP (Plastic)

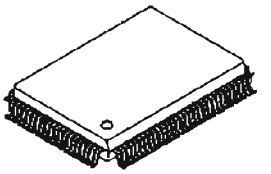

Structure

Silicon gate CMOS IC

Features

- Wide-range instruction system (213 instructions) to cover various types of data
  — 16-bit arithmetic/multiplication and division/boolean bit operation instructions

• Minimum instruction cycle	400ns at 10MHz operation (122μs at 32kHz operation)
• Incorporated ROM capacity	32K bytes (CXP82832) 40K bytes (CXP82840) 52K bytes (CXP82852) 60K bytes (CXP82860)
• Incorporated RAM capacity	1536 bytes (including fluorescent display area)
• Peripheral functions	
— A/D converter	8 bits, 8 channels, successive approximation method (Conversion time of 32μs/10MHz)
— Serial interface	8-bit, 8-stage FIFO incorporated (Auto transfer for 1 to 8 bytes), 1 channel 8-bit clock synchronized type, 1 channel
— Timers	8-bit timer, 8-bit timer/counter, 19-bit time base timer 16-bit capture timer/counter, 32kHz timer/counter
— Fluorescent display panel controller/driver	Supports the universal grid fluorescent display panel. High voltage drive output port of 56 pins (40V) Maximum of 640 segments display possible Display timing number of 1 to 20 Dimmer function Incorporated pull-down resistor (Mask option) Hardware key scan function (Maximum of 16 × 8 key matrix supportable)
— Remote control reception circuit	8-bit pulse measurement counter, 6-stage FIFO
— PWM output	14 bits, 1 channel
• Interruption	16 factors, 15 vectors, multi-interruption possible
• Standby mode	SLEEP/STOP
• Package	100-pin plastic QFP
• Piggyback/evaluation chip	CXP82800 100-pin ceramic QFP

Sony reserves the right to change products and specifications without prior notice. This information does not convey any license by any implication or otherwise under any patents or other right. Application circuits shown, if any, are typical examples illustrating the operation of the devices. Sony cannot assume responsibility for any problems arising out of the use of these circuits.

Block Diagram

SONY

CXP82832/82840/82852/82860

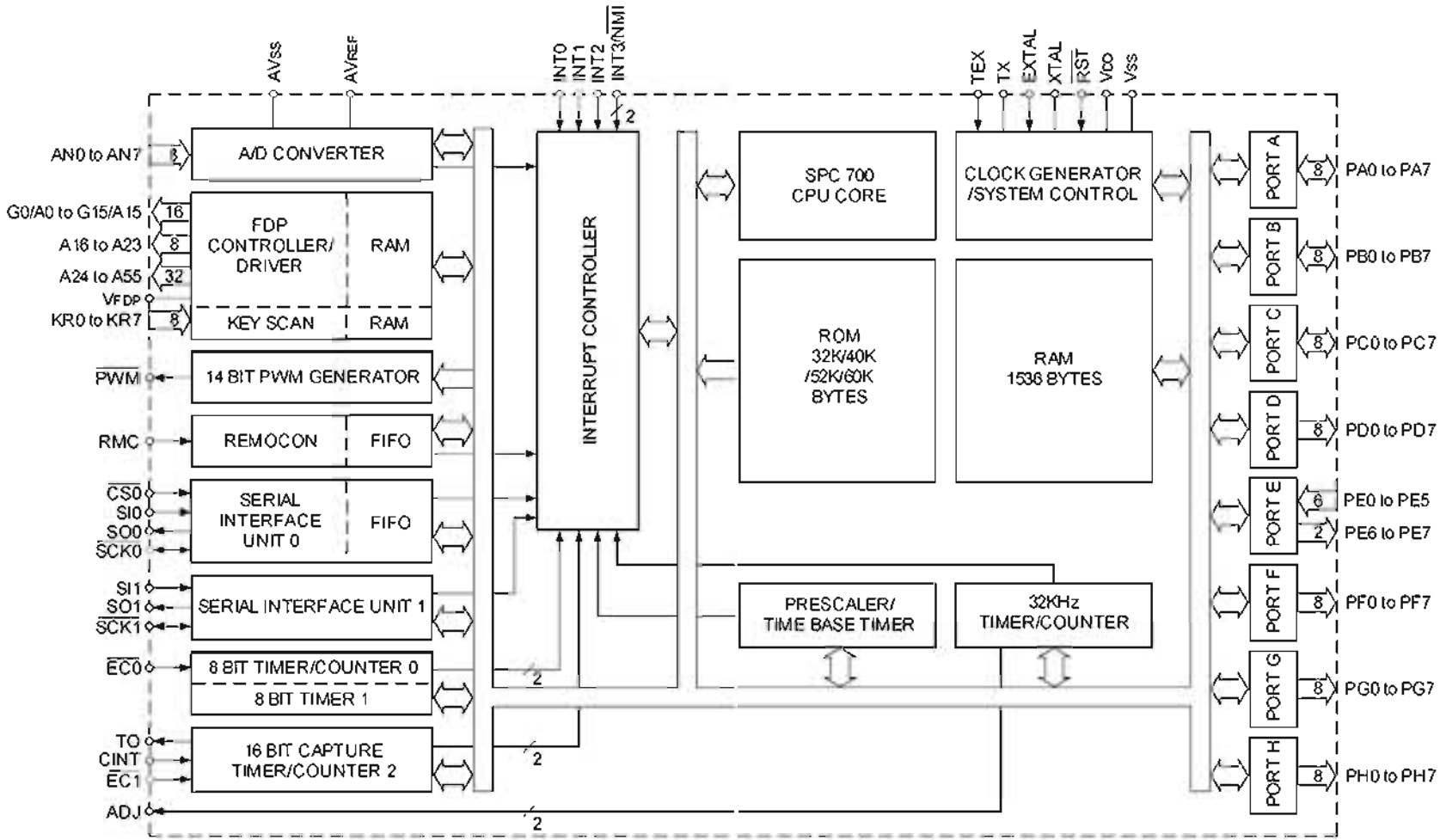

CMOS 8-Bit Single Chip Microcomputer IC

CXP82860

SONY

CXP82832/82840/82852/82860

Pin Assignment (Top View)

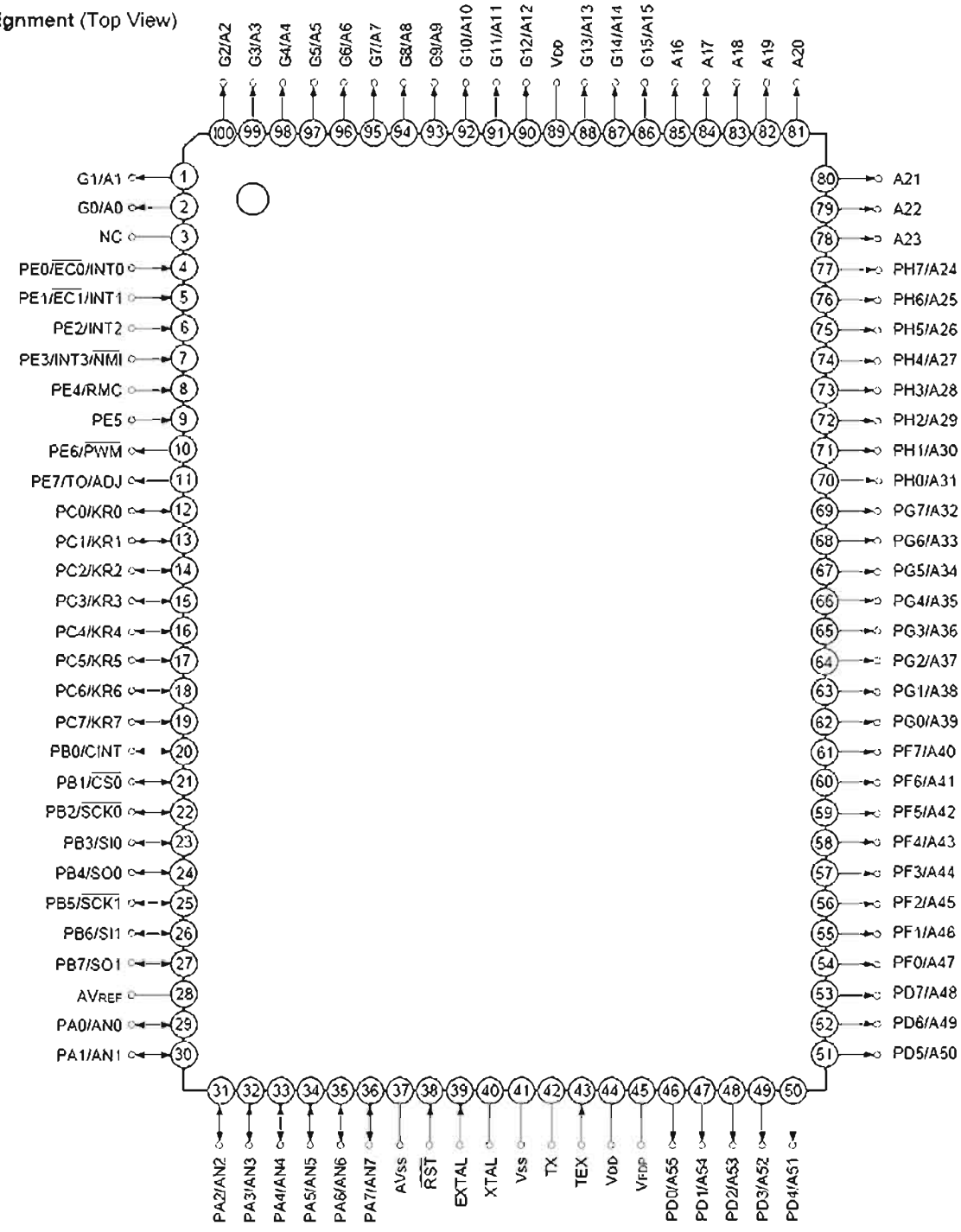

Note) 1. NC (Pin 3) must be connected to VDD.

2. VDD (Pins 44 and 89) must be connected to VDD.

Pin code	I/O	Functions	
PA0/AN0 to PA7/AN7	I/O/ Analog input	(Port A) 8-bit I/O port. I/O can be set in a unit of single bits. Incorporation of the pull-up resistor can be set through the software in a unit of 4 bits. (8pins)	Analog inputs to A/D converter. (8 pins)
PB0/CINT	I/O/Input	(Port B) 8-bit I/O port. I/O can be set in a unit of single bits. Incorporation of the pull-up resistor can be set through the software in a unit of 4 bits. (8 pins)	Capture input to 16-bit timer/counter.
PB1/$\overline{CS0}$	I/O/Input		Chip select input for serial interface (CH0).
PB2/$\overline{SCK0}$	I/O/I/O		Serial clock I/O (CH0).
PB3/SI0	I/O/Input		Serial data input (CH0).
PB4/SO0	I/O/Output		Serial data output (CH0).
PB5/$\overline{SCK1}$	I/O/I/O		Serial clock I/O (CH1).
PB6/SI1	I/O/Input		Serial data input (CH1).
PB7/SO1	I/O/Output		Serial data output (CH1).
PC0/KR0 to PC7/KR7	I/O/Input	(Port C) 8-bit I/O port. I/O can be set in a unit of single bits. Can drive 12mA sync current. Incorporation of the pull-up resistor can be set through the software in a unit of 4 bits. (8 pins)	Serves as key return inputs when operating key scan with fluorescent display panel (FDP) segment signal. (8 pins)
PD0/A55 to PD7/A48	Output/Output	(Port D) 8-bit output port. (8 pins)	FDP segment signal (anode connection) outputs.
PE0/INT0/ $\overline{EC0}$	Input/Input/Input	(Port E) 8-bit port. Lower 6 bits are for inputs; upper 2 bits are for outputs. (8 pins)	Inputs for external interruption request. (4 pins) — External event inputs for timer/counter. (2 pins)
PE1/INT1/ $\overline{EC1}$	Input/Input/Input		
PE2/INT2	Input/Input		
PE3/INT3/ $\overline{NMI}$	Input/Input/Input		Non-maskable interruption request input.
PE4/RMC	Input/Input		Remote control reception circuit input.
PE5	Input		
PE6/$\overline{PWM}$	Output/Output		14-bit PWM output.
PE7/TO/ADJ	Output/Output/ Output		Output for the 16-bit timer/counter rectangular waves, and 32kHz oscillation frequency division.
PF0/A47 to PF7/A40	Output/Output	(Port F) 8-bit output port. (8pins)	FDP segment signal (anode connection) outputs.

Pin code	I/O	Functions	
PG0/A39 to PG7/A32	Output/Output	(Port G) 8-bit output port. (8 pins)	FDP segment signal (anode connection) outputs. (8 pins)
PH0/A31 to PH7/A24	Output/Output	(Port H) 8-bit output port. (8 pins)	FDP segment signal (anode connection) outputs. (8 pins)
A16 to A23	Output	FDP segment signal (anode connection) outputs. (8 pins)	
G0/A0 to G15/A15	Output/Output	Outputs for FDP timing signals (grid connection)/segment signals (anode connection). (16 pins)	
V_{FDP}		FDP voltage supply when incorporated pull-down (PD) resistor is set by mask option.	
EXTAL	Input	Crystal connectors for system clock oscillation. When the clock is supplied externally, input to EXTAL; opposite phase clock should be input to XTAL.	
XTAL	Output		
TEX	Input	Crystal connectors for 32kHz timer/counter clock oscillation. For usage as event input, input to TEX, and open TX.	
TX	Output		
$\overline{RST}$	Input	Low-level active, system reset	
NC		NC. Under normal operation, connect to V_{DD}.	
AV_{REF}	Input	Reference voltage input for A/D converter.	
AV_{SS}		A/D converter GND.	
V_{DD}		Vcc supply.	
V_{SS}		GND.	

74VHC153MX

Dual 4-Input Multiplexer

Pin Descriptions

Pin Names	Description
I_{0a}–I_{3a}	Side A Data Inputs
I_{0b}–I_{3b}	Side B Data Inputs
S_0, S_1	Common Select Inputs
$\overline{E}_a$	Side A Enable Input
$\overline{E}_b$	Side B Enable Input
Z_a	Side A Output
Z_b	Side B Output

Connection Diagram

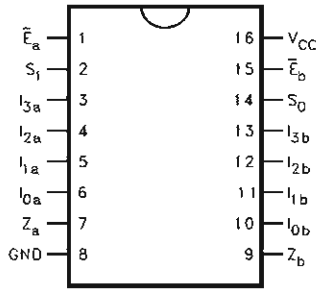

Functional Description

The VHC153 is a dual 4-input multiplexer. It can select two bits of data from up to four sources under the control of the common Select inputs (S_0, S_1). The two 4-input multiplexer circuits have individual active-LOW Enables ($\overline{E}_a$, $\overline{E}_b$) which can be used to strobe the outputs independently. When the Enables ($\overline{E}_a$, $\overline{E}_b$) are HIGH, the corresponding outputs (Z_a, Z_b) are forced LOW. The VHC153 is the logic implementation of a 2-pole, 4-position switch, where the position of the switch is determined by the logic levels supplied to the Select inputs. The logic equations for the outputs are shown below.

$$Z_a = \overline{E}_a \cdot (I_{0a} \cdot \overline{S}_1 \cdot \overline{S}_0 + I_{1a} \cdot \overline{S}_1 \cdot S_0 + I_{2a} \cdot S_1 \cdot S_0 + I_{3a} \cdot S_1 \cdot S_0)$$

$$Z_b = \overline{E}_b \cdot (I_{0b} \cdot \overline{S}_1 \cdot \overline{S}_0 + I_{1b} \cdot \overline{S}_1 \cdot S_0 + I_{2b} \cdot S_1 \cdot S_0 + I_{3b} \cdot S_1 \cdot S_0)$$

Truth Table

Select Inputs		Inputs (a or b)					Output
S_0	S_1	$\overline{E}$	I_0	I_1	I_2	I_3	Z
X	X	H	X	X	X	X	L
L	L	L	L	X	X	X	L
L	L	L	H	X	X	X	H
H	L	L	X	L	X	X	L
H	L	L	X	H	X	X	H
L	H	L	X	X	L	X	L
L	H	L	X	X	H	X	H
H	H	L	X	X	X	L	L
H	H	L	X	X	X	H	H

H = HIGH Voltage Level
L = LOW Voltage Level
X = Immaterial

Logic Diagram

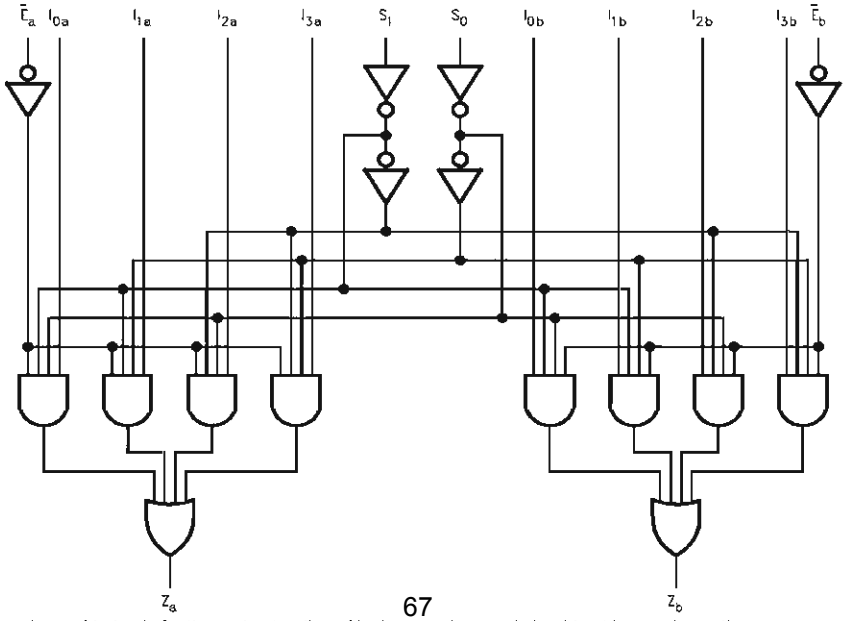

Please note that this diagram is provided only for the understanding of logic operations and should not be used to estimate propagation delays.

74VHC157MX

Quad 2-Input Multiplexer

Pin Configuration

Pin Names	Description
I_{0a}–I_{0d}	Source 0 Data Inputs
I_{1a}–I_{1d}	Source 1 Data Inputs
$\overline{E}$	Enable Input
S	Select Input
Z_a–Z_d	Outputs

Connection Diagram

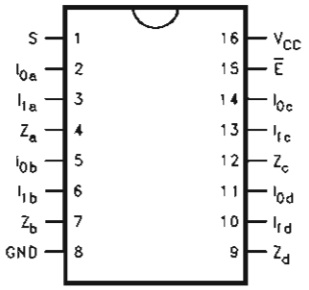

Truth Table

Inputs				Outputs
$\overline{E}$	S	I_0	I_1	Z
H	X	X	X	L
L	H	X	L	L
L	H	X	H	H
L	L	L	X	L
L	L	H	X	H

H = HIGH Voltage Level
L = LOW Voltage Level
X = Immaterial

Functional Description

The VHC157 is a quad 2-input multiplexer. It selects four bits of data from two sources under the control of a common Select input (S). The Enable input ($\overline{E}$) is active-LOW. When $\overline{E}$ is HIGH, all of the outputs (Z) are forced LOW regardless of all other inputs. The VHC157 is the logic implementation of a 4-pole, 2-position switch where the position of the switch is determined by the logic levels supplied to the Select input. The logic equations for the outputs are shown below:

$$Z_a = \overline{E} \cdot (I_{1a} \cdot S + I_{0a} \cdot \overline{S})$$
$$Z_b = \overline{E} \cdot (I_{1b} \cdot S + I_{0b} \cdot \overline{S})$$
$$Z_c = \overline{E} \cdot (I_{1c} \cdot S + I_{0c} \cdot \overline{S})$$
$$Z_d = \overline{E} \cdot (I_{1d} \cdot S + I_{0d} \cdot \overline{S})$$

A common use of the VHC157 is the moving of data from two groups of registers to four common output busses. The particular register from which the data comes is determined by the state of the Select input. A less obvious use is as a function generator. The VHC157 can generate any four of the sixteen different functions of two variables with one variable common. This is useful for implementing gating functions.

Logic Diagram

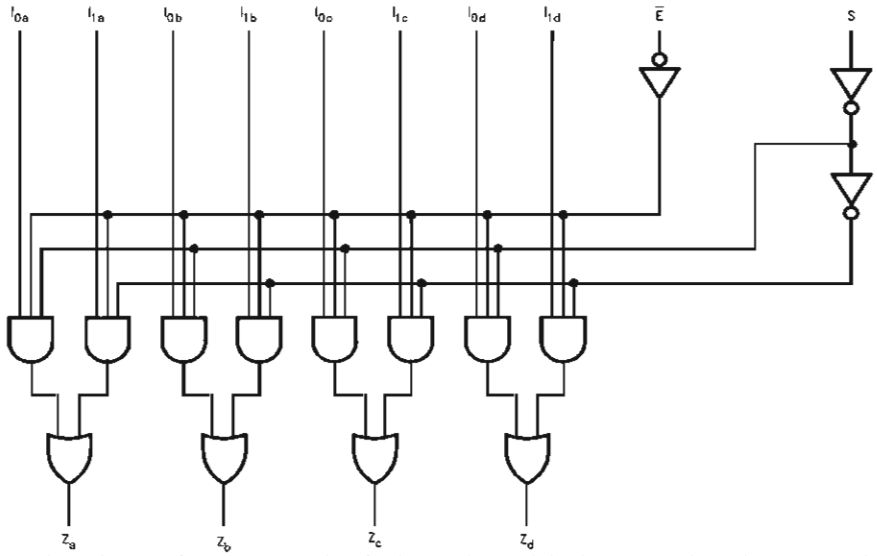

Please note that this diagram is provided only for the understanding of logic operations and should not be used to estimate propagation delays.

74VHC574

OCTAL D-TYPE FLIP FLOP WITH 3 STATE OUTPUTS NON INVERTING

- HIGH SPEED:
- f_{MAX} = 180 MHz (TYP.) at V_{CC} = 5V
- LOW POWER DISSIPATION:
  I_{CC} = 4 µA (MAX.) at T_A=25°C
- HIGH NOISE IMMUNITY:
  $V_{NIH} = V_{NIL}$ = 28% V_{CC} (MIN.)
- POWER DOWN PROTECTION ON INPUTS
- SYMMETRICAL OUTPUT IMPEDANCE:
  $|I_{OH}| = I_{OL}$ = 8 mA (MIN)
- BALANCED PROPAGATION DELAYS:
  $t_{PLH} \cong t_{PHL}$
- OPERATING VOLTAGE RANGE:
  V_{CC}(OPR) = 2V to 5.5V
- PIN AND FUNCTION COMPATIBLE WITH 74 SERIES 574
- IMPROVED LATCH-UP IMMUNITY
- LOW NOISE: V_{OLP} = 0.9V (MAX.)

SOP TSSOP

ORDER CODES

PACKAGE	TUBE	T & R
SOP	74VHC574M	74VHC574MTR
TSSOP		74VHC574TTR

DESCRIPTION

The 74VHC574 is an advanced high-speed CMOS OCTAL D-TYPE FLIP FLOP with 3 STATE OUTPUTS NON INVERTING fabricated with sub-micron silicon gate and double-layer metal wiring C^2MOS technology.

These 8 bit D-Type flip-flop is controlled by a clock input (CK) and an output enable input ($\overline{OE}$).

On the positive transition of the clock, the Q outputs will be set to the logic states that were setup at the D inputs.

While the ($\overline{OE}$) input is low, the 8 outputs will be in a normal logic state (high or low logic level) and while high level the outputs will be in a high impedance state.

The Output control does not affect the internal operation of flip flop; that is, the old data can be retained or the new data can be entered even while the outputs are off.

Power down protection is provided on all inputs and 0 to 7V can be accepted on inputs with no regard to the supply voltage. This device can be used to interface 5V to 3V.

All inputs and outputs are equipped with protection circuits against static discharge, giving them 2KV ESD immunity and transient excess voltage.

PIN CONNECTION AND IEC LOGIC SYMBOLS

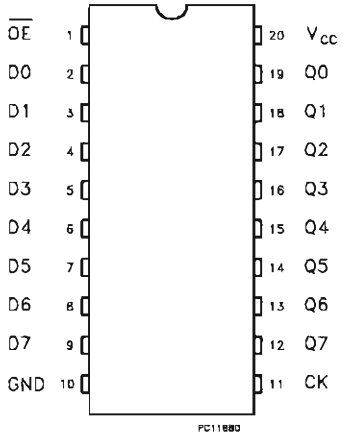

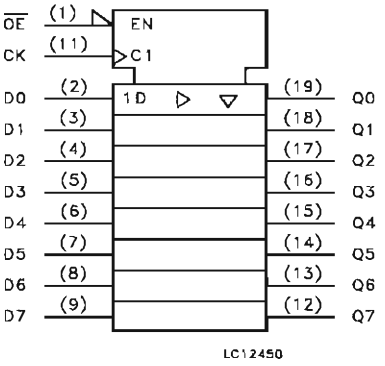

74VHC574

INPUT EQUIVALENT CIRCUIT

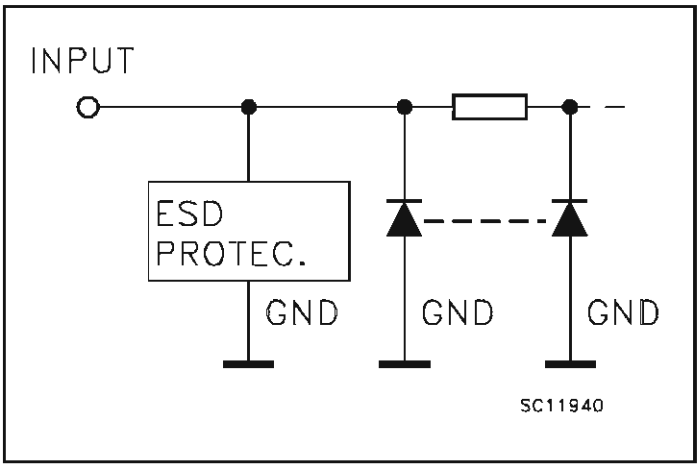

PIN DESCRIPTION

PIN No	SYMBOL	NAME AND FUNCTION
1	$\overline{OE}$	3-State Output Enable Input (Active LOW)
2, 3, 4, 5, 6, 7, 8, 9	D0 to D7	Data Inputs
12, 13, 14, 15, 16, 17, 18, 19	Q0 to Q7	3-State Outputs
11	CK	Clock Input (LOW-to-HIGH Edge Triggered)
10	GND	Ground (0V)
20	V_{CC}	Positive Supply Voltage

TRUTH TABLE

INPUTS			OUTPUT
$\overline{OE}$	CK	D	Q
H	X	X	Z
L	↓	X	NO CHANGE
L	↑	L	L
L	↑	H	H

X : Don't Care
Z : High Impedance

LOGIC DIAGRAM

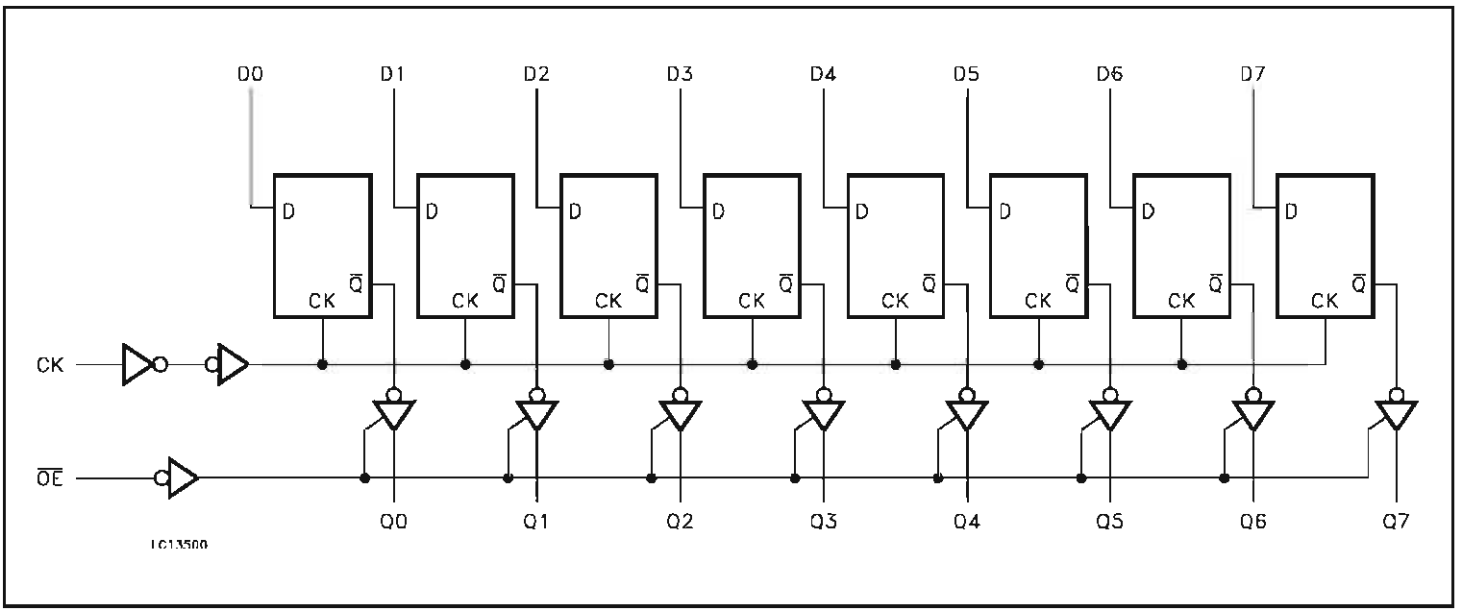

This logic diagram has not be used to estimate propagation delays

Features

- Fast Read Access Time – 120 ns, see AT27BV020 for Faster Speeds
- Dual Voltage Range Operation
  - Low Voltage Power Supply Range, 3.0V to 3.6V or Standard 5V ± 10% Supply Range
- Compatible with JEDEC Standard AT27C020
- Low Power CMOS Operation
  - 20 µA Max (Less than 1 µA Typical) Standby for V_{CC} = 3.6V
  - 29 mW Max Active at 5 MHz for V_{CC} = 3.6V
- JEDEC Standard Packages
  - 32-lead PLCC
  - 32-lead TSOP
  - 32-lead VSOP
- High Reliability CMOS Technology
  - 2,000V ESD Protection
  - 200 mA Latchup Immunity
- Rapid Programming Algorithm – 100 µs/Byte (Typical)
- Two-line Control
- CMOS and TTL Compatible Inputs and Outputs
  - JEDEC Standard for LVTTL
- Integrated Product Identification Code
- Industrial Temperature Range
- Green (Pb/Halide-free) Packaging Option

2-Megabit (256K x 8) Low Voltage OTP EPROM

AT27LV020A

1. Description

The AT27LV020A is a high-performance, low-power, low-voltage 2,097,152 bit one-time programmable read-only memory (OTP EPROM) organized as 256K by 8 bits. It requires only one supply in the range of 3.0 to 3.6V in normal read mode operation, making it ideal for fast, portable systems using battery power.

Atmel's innovative design techniques provide fast speeds that rival 5V parts while keeping the low power consumption of a 3V supply. At V_{CC} = 3.0V, any byte can be accessed in less than 120 ns. With a typical power dissipation of only 18 mW at 5 MHz and V_{CC} = 3.3V, the AT27LV020A consumes less than one fifth the power of a standard 5V EPROM. Standby mode supply current is typically less than 1 µA at 3.3V.

The AT27LV020A is available in industry-standard JEDEC approved one-time programmable (OTP) plastic PLCC, TSOP, and VSOP. All devices feature two-line control ($\overline{CE}$, $\overline{OE}$) to give designers the flexibility to prevent bus contention.

The AT27LV020A operating with V_{CC} at 3.0V produces TTL level outputs that are compatible with standard TTL logic devices operating at V_{CC} = 5.0V. The device is also capable of standard 5-volt operation making it ideally suited for dual supply range systems or card products that are pluggable in both 3-volt and 5-volt hosts.

Atmel's AT27LV020A has additional features to ensure high quality and efficient production use. The Rapid Programming Algorithm reduces the time required to program the part and guarantees reliable programming. Programming time is typically only 100 µs/byte. The Integrated Product Identification Code electronically identifies the device and manufacturer. This feature is used by industry standard programming equipment to select the proper programming algorithms and voltages. The AT27LV020A programs exactly the same way as a standard 5V AT27C020 and uses the same programming equipment.

0549F–EPROM–05/05

2. Pin Configurations

Pin Name	Function
A0 - A17	Addresses
O0 - O7	Outputs
$\overline{CE}$	Chip Enable
$\overline{OE}$	Output Enable
$\overline{PGM}$	Program Strobe
NC	No Connect

2.1 32-lead TSOP/VSOP (Type 1) Top View

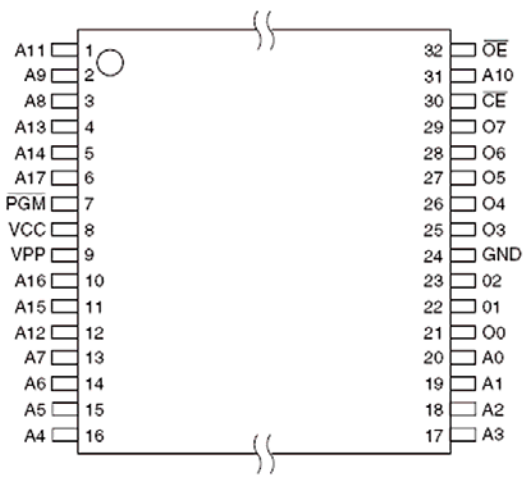

2.2 32-lead PLCC – Top View

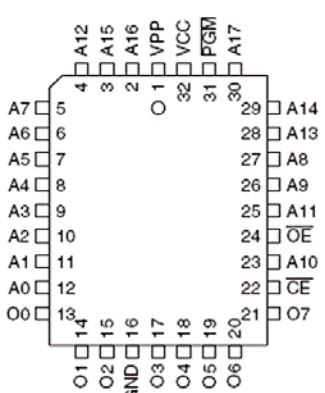

3. System Considerations

Switching between active and standby conditions via the Chip Enable pin may produce transient voltage excursions. Unless accommodated by the system design, these transients may exceed datasheet limits, resulting in device non-conformance. At a minimum, a 0.1 µF high frequency, low inherent inductance, ceramic capacitor should be utilized for each device. This capacitor should be connected between the V_{CC} and Ground terminals of the device, as close to the device as possible. Additionally, to stabilize the supply voltage level on printed circuit boards with large EPROM arrays, a 4.7 µF bulk electrolytic capacitor should be utilized, again connected between the V_{CC} and Ground terminals. This capacitor should be positioned as close as possible to the point where the power supply is connected to the array.

4. Block Diagram

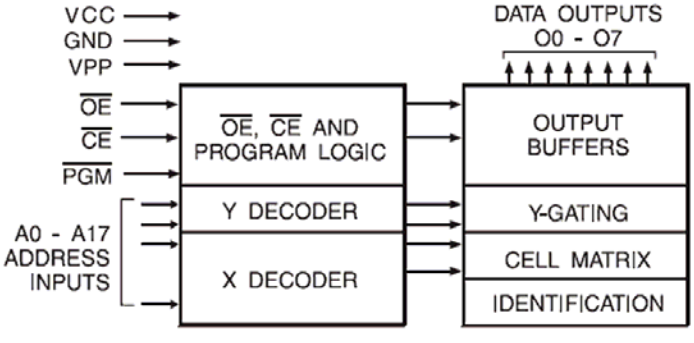

5. Absolute Maximum Ratings*

Temperature Under Bias	-40°C to +85°C
Storage Temperature	-65°C to +125°C
Voltage on any Pin with with Respect to Ground	-2.0V to +7.0V[1]
Voltage on A9 with Respect to Ground	-2.0V to +14.0V[1]
V_{PP} Supply Voltage with Respect to Ground	-2.0V to +14.0V[1]

*NOTICE: Stresses beyond those listed under "Absolute Maximum Ratings" may cause permanent damage to the device. This is a stress rating only and functional operation of the device at these or any other conditions beyond those indicated in the operational sections of this specification is not implied. Exposure to absolute maximum rating conditions for extended periods may affect device reliability.

Notes: 1. Minimum voltage is -0.6V DC which may undershoot to -2.0V for pulses of less than 20 ns. Maximum output pin voltage is V_{CC} + 0.75V DC which may be exceeded if certain precautions are observed (consult application notes) and which may overshoot to +7.0V for pulses of less than 20 ns.

BA7046/BA7046F

SYNC Separator IC with AFC

● Block diagrams

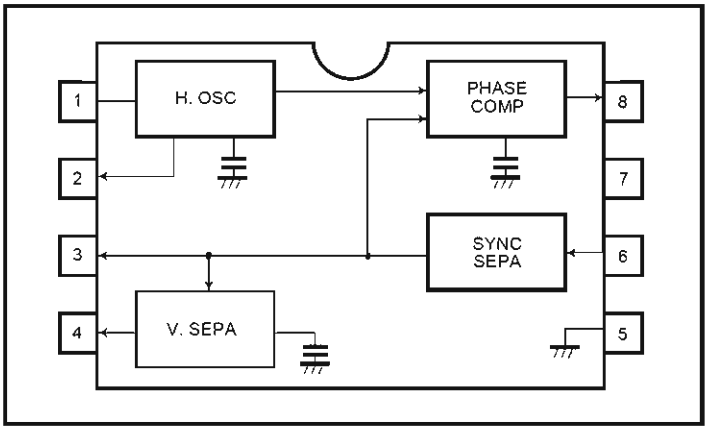

BA7046

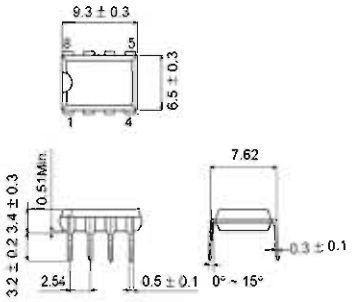

BA7046F

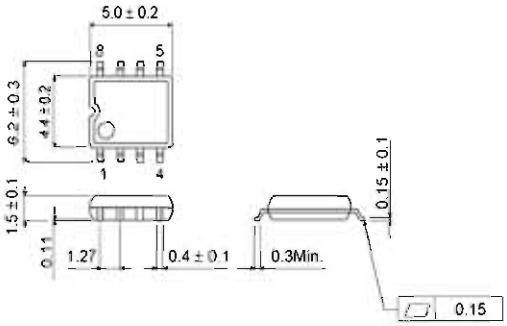

● Pin descriptions

Pin No.	Function
1	Horizontal oscillator resistor
2	H_D output
3	SYNC output (open collector)
4	V_D output
5	GND
6	Video input
7	Power supply
8	Phase comparator output

● Input / output circuits

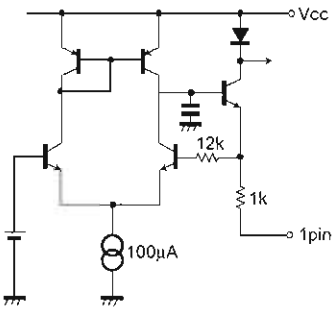

Fig. 1

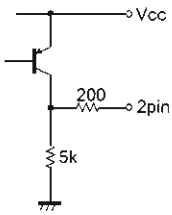

Fig. 2

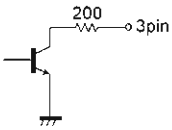

Fig. 3

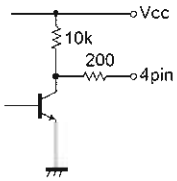

Fig. 4

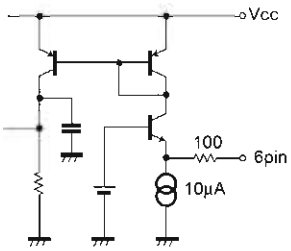

Fig. 5

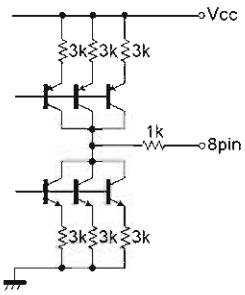

Fig. 6

24-Bit Multi Standard Audio DSP Decoder

CS493263

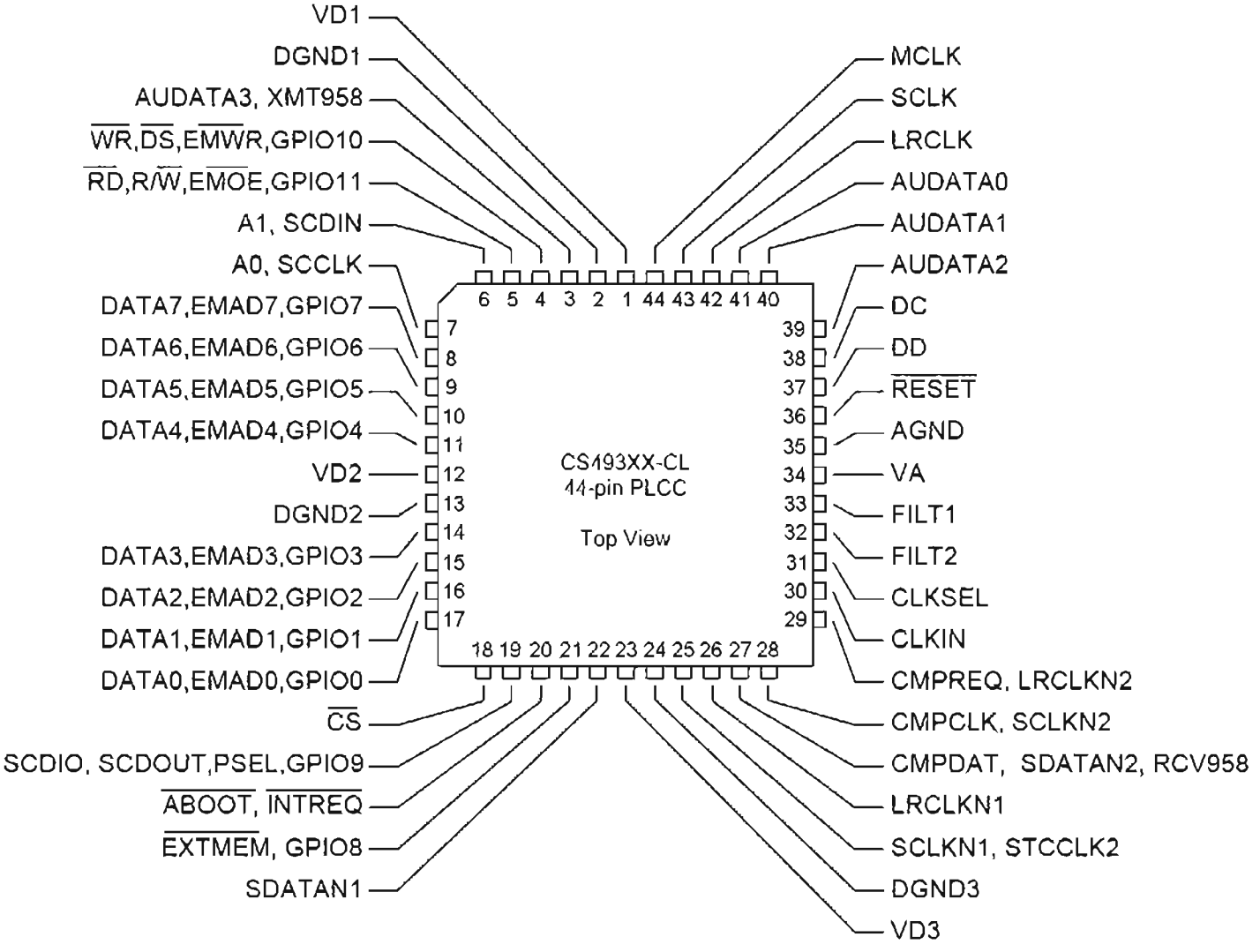

Video signal switcher

Multimedia ICs

BA7603 / BA7603F

The BA7603 and BA7603F are switching ICs developed for use in VCRs. Each contains three two-channel analog multi-plexers. The switches have sync-tip clamped inputs and are ideal for switching video signals.

●Applications

Video cassette recorders and televisions

●Features

1) Three 2-input / 1-output switches.
2) Sync-tip clamped inputs.
3) 5V power supply.
4) Low power consumption (62.5mW Typ.).
5) Excellent frequency characteristics (10MHz, 0dB Typ.).
6) Wide dynamic range (2.9V_{P-P} Typ.).
7) Fast switching speed (50ns Typ.).

●Absolute maximum ratings (Ta = 25°C)

Parameter	Symbol	Limits	Unit
Power supply voltage	Vcc	9	V
Power dissipation	Pd	500*	mW
Operating temperature	Topr	– 40 ~ + 85	°C
Storage temperature	Tstg	– 55 ~ + 125	°C

* Reduced by 5.0mW for each increase in Ta of 1°C over 25°C.

●Block diagram

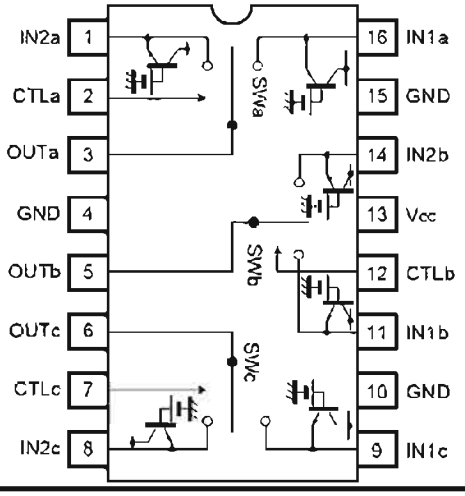

CTL	Output
L	IN 2
H	IN 1

SW_a, SW_b, SW_c: pedestal-clamped input

●Reference data

Pin DC voltages (reference values)

Units: Vdc

Pin No.	DC voltage	Pin No.	DC voltage
1	2.05	9	2.05
2	4.91	10	0
3	0.65	11	2.05
4	0	12	4.91
5	0.65	13	5.00
6	0.85	14	2.05
7	4.91	15	0
8	2.05	16	2.05

Electrical characteristics

Parameter	Min.	Typ.	Max.	Unit
Sync tip clamp level	0.49	0.65	0.80	Vdc
Input impedance (with clamp)	—	1.7M	—	Ω
Output impedance	—	30	—	Ω

The input coupling capacitor values should be 0.1μF to 1μF

BA7660FS 3-Channel 75 Ohm Driver

● Electrical characteristics (unless otherwise noted, Ta = 25°C, V_{CC} = 5V)

Parameter	Symbol	Min.	Typ.	Max.	Unit	Conditions
Circuit current	I_{CC}	11.4	22.8	34.2	mA	With no signal
Maximum output level	Vom	2.6	3.0	—	V_{P-P}	f = 1kHz,THD = 1%
Voltage gain	G_V	5.5	6.0	6.5	dB	f = 4.43MHz,1V_{P-P}
Frequency characteristic	G_f	– 1.0	0.0	1.0	dB	f = 7MHz / 1MHz,1V_{P-P}
Muting attenuation	M_T	—	– 60	—	dB	f = 4.43MHz,1V_{P-P}
Muting switching level HIGH	V_{THH}	3.5	—	V_{CC}	V	—
Muting switching level LOW	V_{THL}	0	—	1.0	V	—

● Guaranteed design parameters (unless otherwise noted, Ta = 25°C, V_{CC} = 5V)

Parameter	Symbol	Min.	Typ.	Max.	Unit	Conditions
Differential gain	DG	—	0.5	1.5	%	1.0V_{P-P} reference staircase signal
Differential phase	DP	—	0.5	1.5	deg	1.0V_{P-P} reference staircase signal
Interchannel crosstalk	C_T	—	– 60	– 55	dB	f = 4.43MHz,1V_{P-P}
Interchannel voltage gain differential	ΔG_V	– 0.5	0.0	0.5	dB	f = 4.43MHz,1V_{P-P}

● Measurement circuit

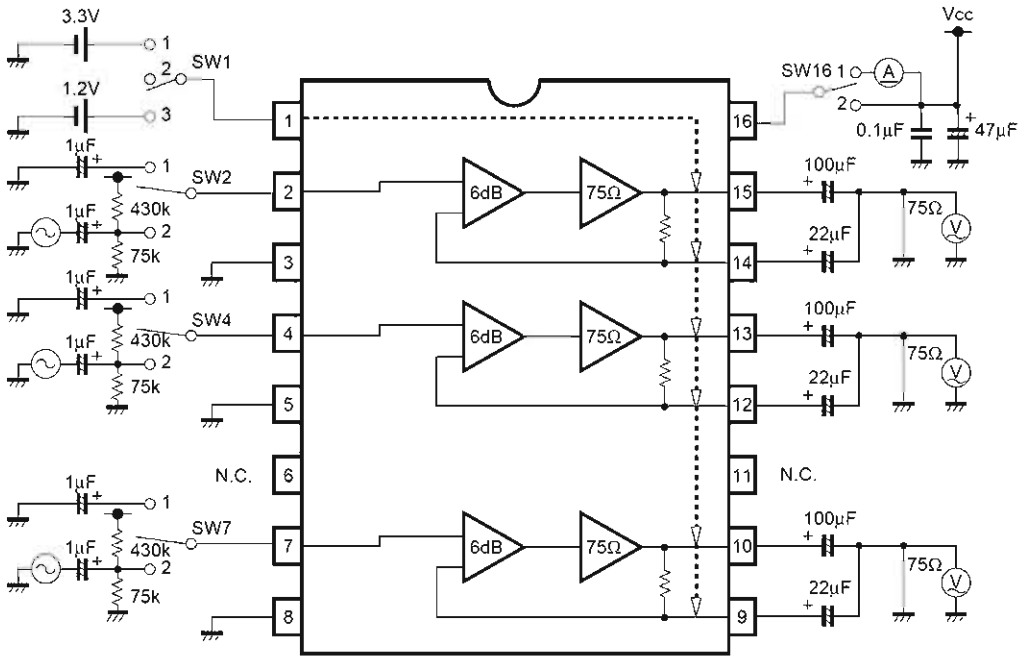

BA7660FS

●Pin descriptions and input / output circuits

Pin. No	Pin name	IN	OUT	Reference voltage	Equivalent circuit	Function
1	MUTE	○	—	—	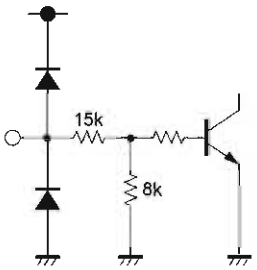	Muting control If MUTE (pin 1) is set to HIGH, muting is carried out simultaneously on all three channels.
2 4 7	INA INB INC	○	—	—	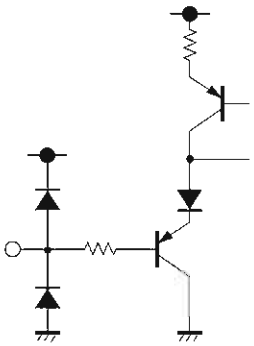	Signal input Input signals consist of composite video signals, Y signals, C signals, RGB, and others. The input level is within a range of 0 to 1.3 (min.) to 1.5 (typ.).
3 5 8	GND	—	—	0V	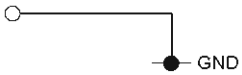	Ground
14 12 9 15 13 10	OUTA2 OUTB2 OUTC2 OUTA1 OUTB1 OUTC1	—	○	0.9V 0.95V	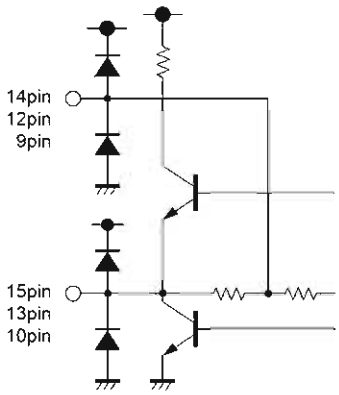	Signal output The signal output level is (0.9 + 2 × input voltage [V]). Pins 9, 12, and 14 are the pins for sag correction. If pins 10, 13, and 15 are set to 0.2V or less, the protective circuit is triggered and the power-saving mode is accessed.
16	Vcc	—	—	5.0V		Power supply

8-channel analog multiplexer / demultiplexer

BU4051BC / BU4051BCF / BU4051BCFV

The BU4051BC, BU4051BCF and BU4051BCFV are analog multiplexers / demultiplexers which use three-input digital signals for control via an 8-channel analog switch.
These products feature high on / off output voltage ratio and low crosstalk between analog switches.

●Block diagram

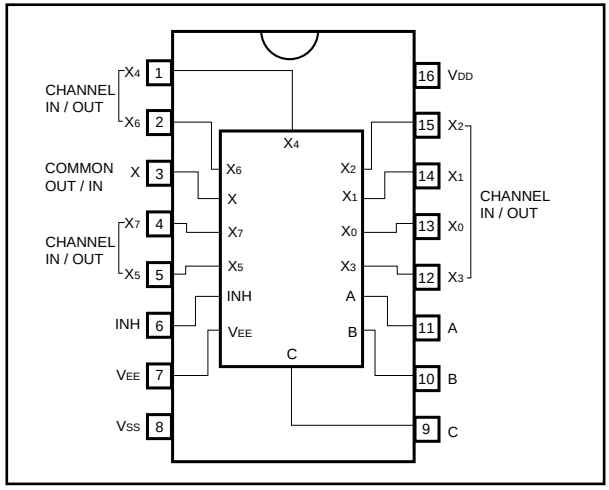

●Logic circuit diagram

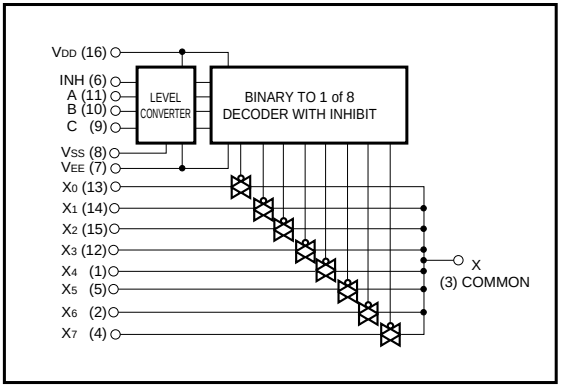

●Truth table

INH	A	B	C	ON SWITCH
L	L	L	L	X_0
L	H	L	L	X_1
L	L	H	L	X_2
L	H	H	L	X_3
L	L	L	H	X_4
L	H	L	H	X_5
L	L	H	H	X_6
L	H	H	H	X_7
H	X	X	X	NONE

X: Irrelevant

Triple 2-channel analog multiplexer / demultiplexer

BU4053BC / BU4053BCF / BU4053BCFV

The BU4053BC, BU4053BCF, and BU4053BCFV are multiplexers / demultiplexers capable of selecting and combining analog signals and digital signals in a 2 ch × 3 configuration. Inhibit signals and control signals are used to turn on the switch corresponding to each of the channels. In addition, even if the logical amplitude (V_{DD}-V_{SS}) of the control signal is low, signals with a large amplitude (V_{DD}-V_{EE}) can be switched.
Also, as each switch has a low ON resistance, it can be connected to a low impedance circuit.

●Block diagram

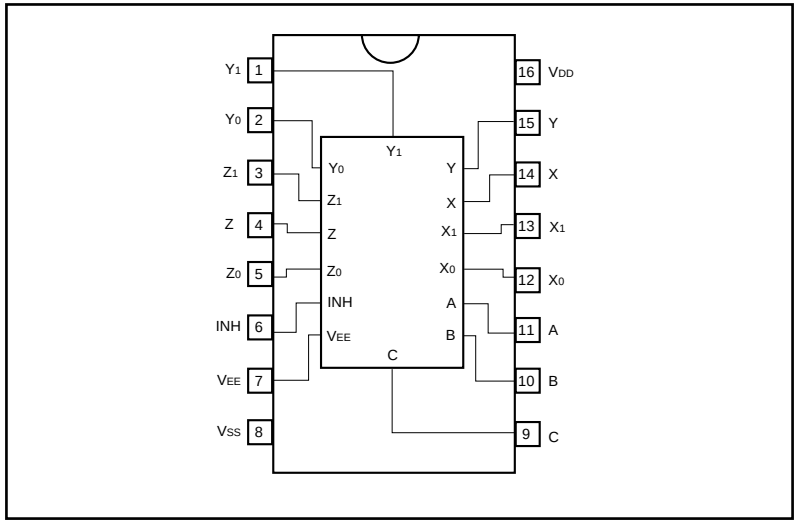

●Logic circuit diagram

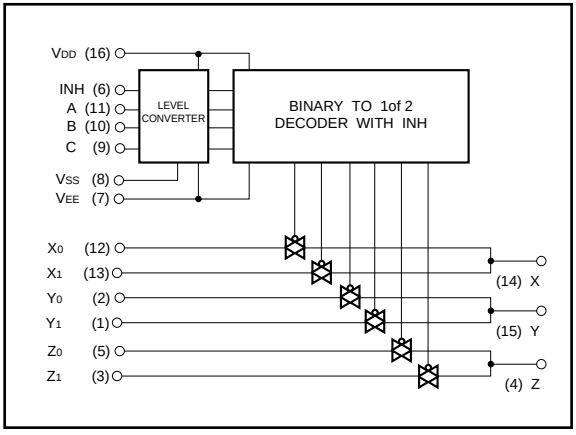

●Truth table

INH	A	B	C	ON SWITCH
L	L	L	L	X_0 Y_0 Z_0
L	H	L	L	X_1 Y_0 Z_0
L	L	H	L	X_0 Y_1 Z_0
L	H	H	L	X_1 Y_1 Z_0
L	L	L	H	X_0 Y_0 Z_1
L	H	L	H	X_1 Y_0 Z_1
L	L	H	H	X_0 Y_1 Z_1
L	H	H	H	X_1 Y_1 Z_1
H	X	X	X	NONE

X: Irrelevant

8-bit compatible shift / store register

BU4094BC / BU4094BCF / BU4094BCFV

The BU4094BC, BU4094BCF, and BU4094BCFV are shift / store registers, each consisting of an 8-bit register and an 8-bit latch.
As the data in the shift register can be latched by an asynchronous strobe input, it is possible to hold the output in the data transfer mode.
The tri-state parallel output can be connected directly with an 8-bit bus line.
These registers are suitable for in-line / parallel data conversion, data receivers and other similar applications.

●Logic circuit diagram

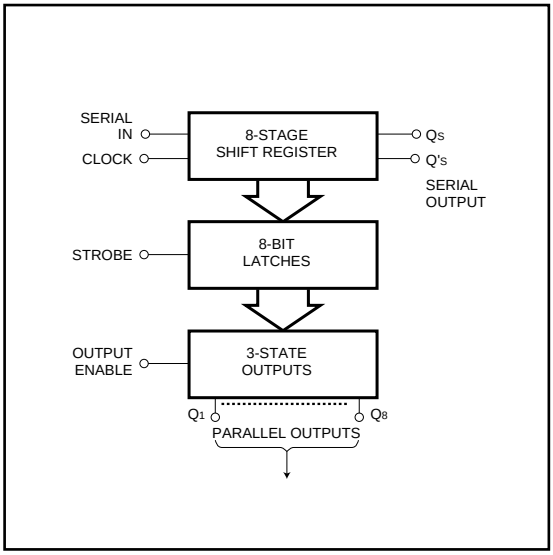

●Block diagram

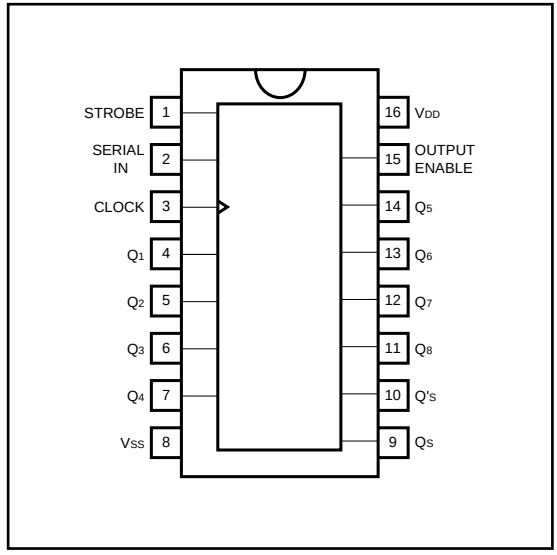

●Truth table

CLOCK	OUTPUT ENABLE	STROBE	SERIAL IN	Parallel output		Serial output	
				Q_1	Q_n	Q_S	Q'_S
↑	H	H	L	L	Q_{n-1}	Q_7	NC
↑	H	H	H	H	Q_{n-1}	Q_7	NC
↑	H	L	X	NC	NC	Q_7	NC
↑	L	X	X	Z	Z	Q_7	NC
↓	H	X	X	NC	NC	NC	Q_S
↓	L	X	X	Z	Z	NC	Q_S

NC: No Change Z: High Impedance X: Irrelevant

CS4391

24-Bit, 192 kHz Stereo DAC with Volume Control

Features

- Complete Stereo DAC System: Interpolation, D/A, Output Analog Filtering
- 108 dB Dynamic Range
- 94 dB THD+N
- Direct Stream Digital Mode
- Low Clock Jitter Sensitivity
- +5 V to +3 V Power Supply
- ATAPI Mixing
- On-Chip Digital De-emphasis for 32, 44.1, and 48 kHz
- Volume Control with Soft Ramp
  - 119 dB Attenuation
  - 1 dB Step Size
  - Zero Crossing Click-Free Transitions
- 36 mW with 3 V supply
- Direct Interface with 5 V to 1.8 V Logic

Description

The CS4391 is a complete stereo digital-to-analog system including digital interpolation, fourth-order delta-sigma digital-to-analog conversion, digital de-emphasis, volume control, channel mixing and analog filtering. The advantages of this architecture include: ideal differential linearity, no distortion mechanisms due to resistor matching errors, no linearity drift over time and temperature and a high tolerance to clock jitter.

The CS4391 accepts PCM data at sample rates from 2 kHz to 192 kHz, DSD audio data, consumes very little power and operates over a wide power supply range. These features are ideal for DVD, A/V receivers, CD and set-top box systems.

ORDERING INFORMATION

CS4391-KZ	20-pin TSSOP	-10 to 70 °C
CDB4391	Evaluation Board	

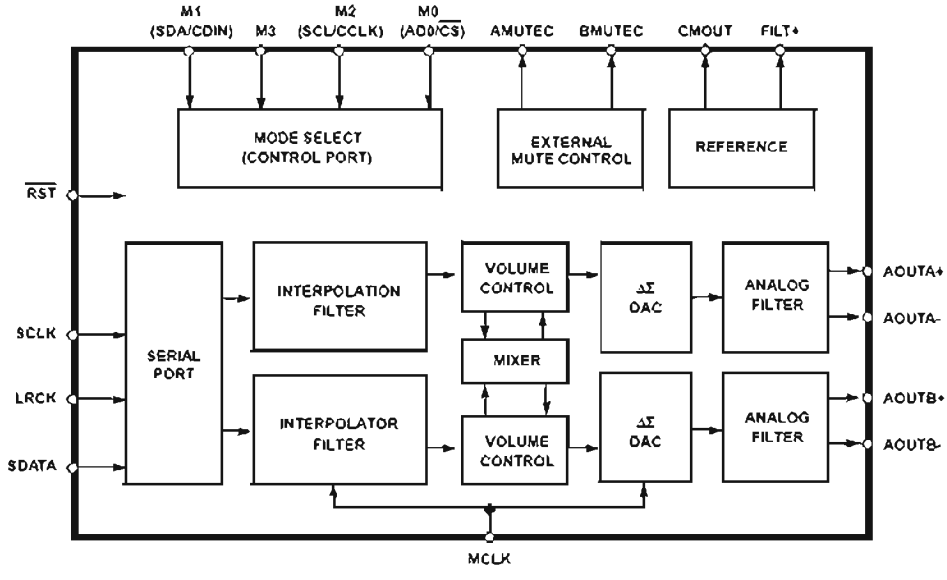

CS4391

PIN DESCRIPTION - PCM DATA MODE

Reset	$\overline{\text{RST}}$	1	20	AMUTEC	Channel A Mute Control
Logic Voltage	VL	2	19	AOUTA-	Differential Output
Serial Data	SDATA	3	18	AOUTA+	Differential Output
Serial Clock	SCLK	4	17	VA	Analog Power
Left/Right Clock	LRCK	5	16	AGND	Analog Ground
Master Clock	MCLK	6	15	AOUTB+	Differential Output
	M3	7	14	AOUTB-	Differential Output
	(SCL/CCLK) M2	8	13	BMUTEC	Channel B Mute Control
	(SDA/CDIN) M1	9	12	CMOUT	Common Mode Voltage
	(AD0/$\overline{\text{CS}}$) M0	10	11	FILT+	Positive Voltage Reference

PIN DESCRIPTION - DSD MODE

Reset	$\overline{\text{RST}}$	1	20	AMUTEC	Refer to PCM Mode
Logic Voltage	VL	2	19	AOUTA-	Refer to PCM Mode
Channel A Data	DSD_A	3	18	AOUTA+	Refer to PCM Mode
Channel B Data	DSD_B	4	17	VA	Refer to PCM Mode
DSD Mode Select	DSD_MODE	5	16	AGND	Refer to PCM Mode
Master Clock	MCLK	6	15	AOUTB+	Refer to PCM Mode
DSD Serial Clock	DSD_SCLK	7	14	AOUTB-	Refer to PCM Mode
Refer to PCM Mode	(SCL/CCLK) M2	8	13	BMUTEC	Refer to PCM Mode
Refer to PCM Mode	(SDA/CDIN) M1	9	12	CMOUT	Refer to PCM Mode
Refer to PCM Mode	(AD0/$\overline{\text{CS}}$) M0	10	11	FILT+	Refer to PCM Mode

M74HCU04

HEX INVERTER (SINGLE STAGE)

DESCRIPTION

The M54/74HCU04 is a high speed CMOS HEX INVERTER (SINGLE STAGE) fabricated in silicon gate C^2MOS technology. It has the same high speed performance of LSTTL combined with true CMOS low power consumption.

As the intrnal circuit is composed of a single stage inverter, it can be used in crystal oscillator.

All inputs are equipped with circuits against static discharge and transient excess voltage.

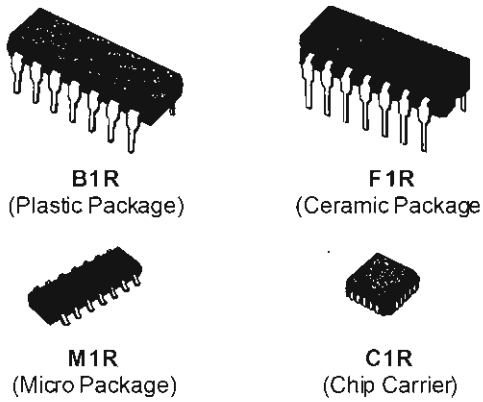

ORDER CODES :

M54HCU04F1R M74HCU04M1R
M74HCU04B1R M74HCU04C1R

INPUT AND OUTPUT EQUIVALENT CIRCUIT

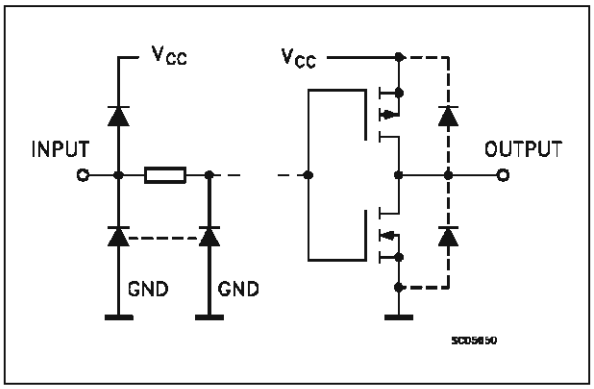

PIN DESCRIPTION

PIN No	SYMBOL	NAME AND FUNCTION
1, 3, 5, 9, 11, 13	1A to 6A	Data Inputs
2, 4, 6, 8, 10, 12	1Y to 6Y	Data Outputs
7	GND	Ground (0V)
14	Vcc	Positive Supply Voltage

PIN CONNECTIONS (top view)

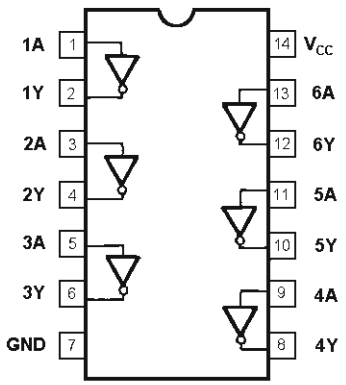

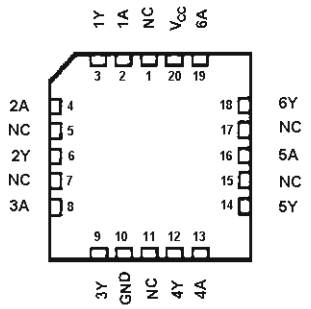

NC =
No Internal
Connection

CRYSTAL®

CS5360

24-Bit Stereo A/D Converter for Digital Audio

Features

- 24 Bit Conversion
- 105 dB Dynamic Range
- -95 dB THD+N
- 128X Oversampling
- Fully Differential Inputs
- Linear Phase Digital Anti-Alias Filtering
  - 21.7 kHz passband (Fs = 48kHz)
  - 85 dB stop band attenuation
  - 0.0025 dB pass band ripple
- High Pass Filter - DC Offset Removal
- Peak Signal Level Detector
  - High Resolution and Bar Graph Modes
- Pin Compatible with CS5334 and CS5335

Description

The CS5360 is a 2-channel, single +5 V supply, 24-bit analog-to-digital converter for digital audio systems. The CS5360 performs sampling, analog-to-digital conversion and anti-alias filtering, generating 24-bit values for both left and right inputs in serial form. The output word rate can be up to 50 kHz per channel.

The CS5360 uses 4th-order, delta-sigma modulation with 128X oversampling followed by digital filtering and decimation, which removes the need for an external anti-alias filter. This ADC uses a differential architecture which provides excellent noise rejection.

The CS5360 has a filter passband to 21.7 kHz. The filter has linear phase, 0.0025 dB passband ripple, and >85 dB stopband rejection. An on-chip high pass filter is also included to remove DC offsets.

ORDERING INFORMATION

CS5360-KS	-10° to 70°C	20-pin Plastic SSOP
CS5360-BS	-40° to 85°C	20-pin Plastic SSOP

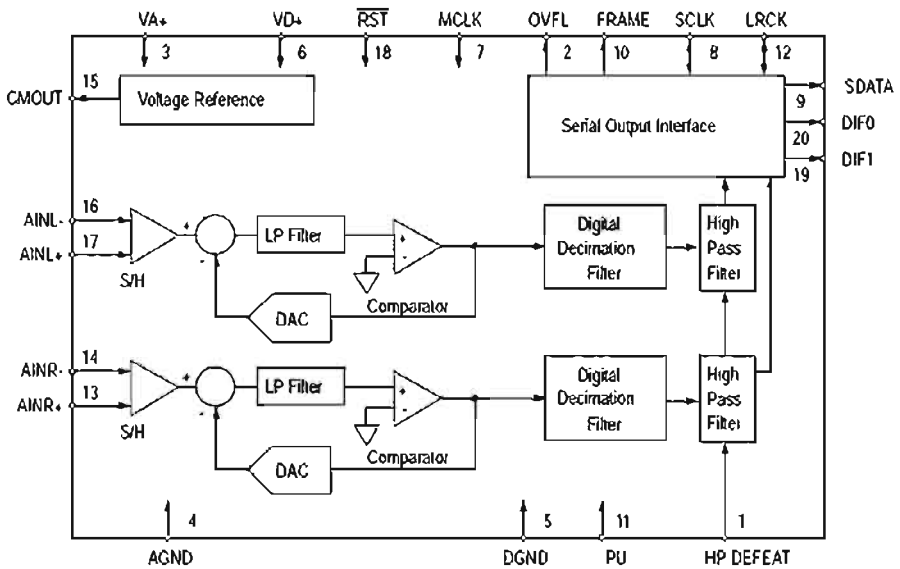

CS5360

5. PIN DESCRIPTIONS

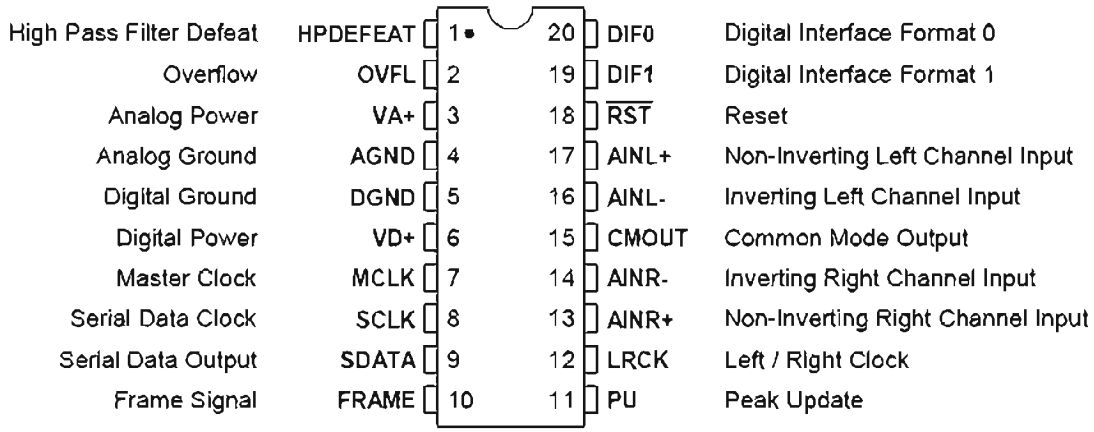

High Pass Filter Defeat - HP DEFEAT

Pin 1, Input

Function

A high logic level on this pin disables the digital high pass filter. A low logic level on this pin enables the high pass filter.

Overflow - $\overline{\text{OVFL}}$

Pin 2, Input

Function

Overflow indicates analog input overrange, for both the Left and Right channels, since the last update request on the PEAK UPDATE (PU) pin. A value of 1 in the register indicates an overrange condition. The left channel information is output on OVFL during the left channel portion of LRCK. The right channel information is available on OVFL during the right channel portion of LRCK The registers are updated with a high to low transition on the PEAK UPDATE pin. A 47 kΩ pull-down resistor on this pin will set the CS5360 in Master Mode.

Positive Analog Power - VA+

Pin 3, Input

Function:

Positive analog supply. Nominally +5 volts.

Analog Ground - AGND

Pin 4, Input

Function:

Analog ground reference.

DGND - Digital Ground

Pin 5, Input

Function:

Digital ground reference.

CRYSTAL®

CS5360

Positive Digital Power - VD+

Pin 6, Input

Function:

Positive digital supply. Nominally +5 volts.

Master Clock - MCLK

Pin 7, Input

Function:

Clock source for the delta-sigma modulator sampling and digital filters. In Master Mode, the frequency of this clock must be 256x the output sample rate, Fs. In Slave Mode, the frequency of this clock must be either 256x, 384x or 512x Fs.

Serial Data Clock - SCLK

Pin 8, Input/Output

Function:

Clocks the individual bits of the serial data out from the SDATA pin. The relationship between LRCK, SCLK and SDATA is controlled by DIF0 and DIF1.In Master Mode, SCLK is an output clock with a frequency of 64x the output sample rate, Fs.In Slave Mode, SCLK is an input.

Serial Data Output - SDATA

Pin 9, Output

Function:

Two's complement MSB-first serial data of 24 bits is output on this pin. Included in the serial data output is the 8-bit Input Signal Level Bits. The data is clocked out via the SCLK clock and the channel is determined by LRCK. The relationship between LRCK, SCLK and SDATA is controlled by DIF0 and DIF1.

Peak Update - PU

Pin 11, Input

Function:

Transfers the Peak Signal Level contents of the Active Registers to the Output Registers on a high to low transition on this pin. This transition will also reset the Active register.

Frame Signal - FRAME

Pin 10, Output

Function:

Frames the Peak Signal Level (PSL) Bits. FRAME goes high coincident with the leading edge of the first PSL bit and falls coincident with the trailing edge of the last PSL bit as shown in Figures 8-10. A 47 kΩ pull-down resistor on this pin will set the Peak Signal Level Monitoring format to "Bar Graph" mode.

Left/Right Clock - LRCK

Pin 12, Input/Output

Function:

LRCK determines which channel, left or right, is to be output on SDATA. The relationship between LRCK, SCLK and SDATA is controlled by DIF0 and DIF1. Although the outputs for each channel are transmitted at different times, Left/Right pairs represent simultaneously sampled analog inputs. In Master Mode, LRCK is an output clock whose frequency is equal to the output sample rate, Fs. In Slave Mode, LRCK is an input clock whose frequency must be equal to Fs.

Differential Right Channel Analog Input - AINR+, AINR-

Pin 13 and Pin 14, Input

Function.

Analog input connections of the right channel differential inputs. Typically 2 Vrms differential (1Vrms for each input pin) for a full-scale analog input signal.

Common Mode Output - CMOUT

Pin 15, Output

Function:

This output, nominally 2 2 V, can be used to bias the analog input circuitry to the common mode voltage of the CS5360 CMOUT is not buffered and the maximum current is 10 µA.

Differential Left Channel Analog Input - AINL+, AINL-

Pin 16 and Pin 17, Input

Function:

Analog input connections of the left channel differential inputs. Typically 2 Vrms differential (1Vrms for each input pin) for a full-scale analog input signal.

Reset - $\overline{\text{RST}}$

Pin 18, Input

Function:

A low logic level on this pin activates Reset.

Digital Interface Format - DIF0, DIF1

Pins 19 and 20, Input

Function.

These two pins select one of 3 digital interface formats or power-down. The format determines the relationship between SCLK, LRCK and SDATA. The formats are detailed in Figures 8-10.

CS8414

96 kHz Digital Audio Receiver

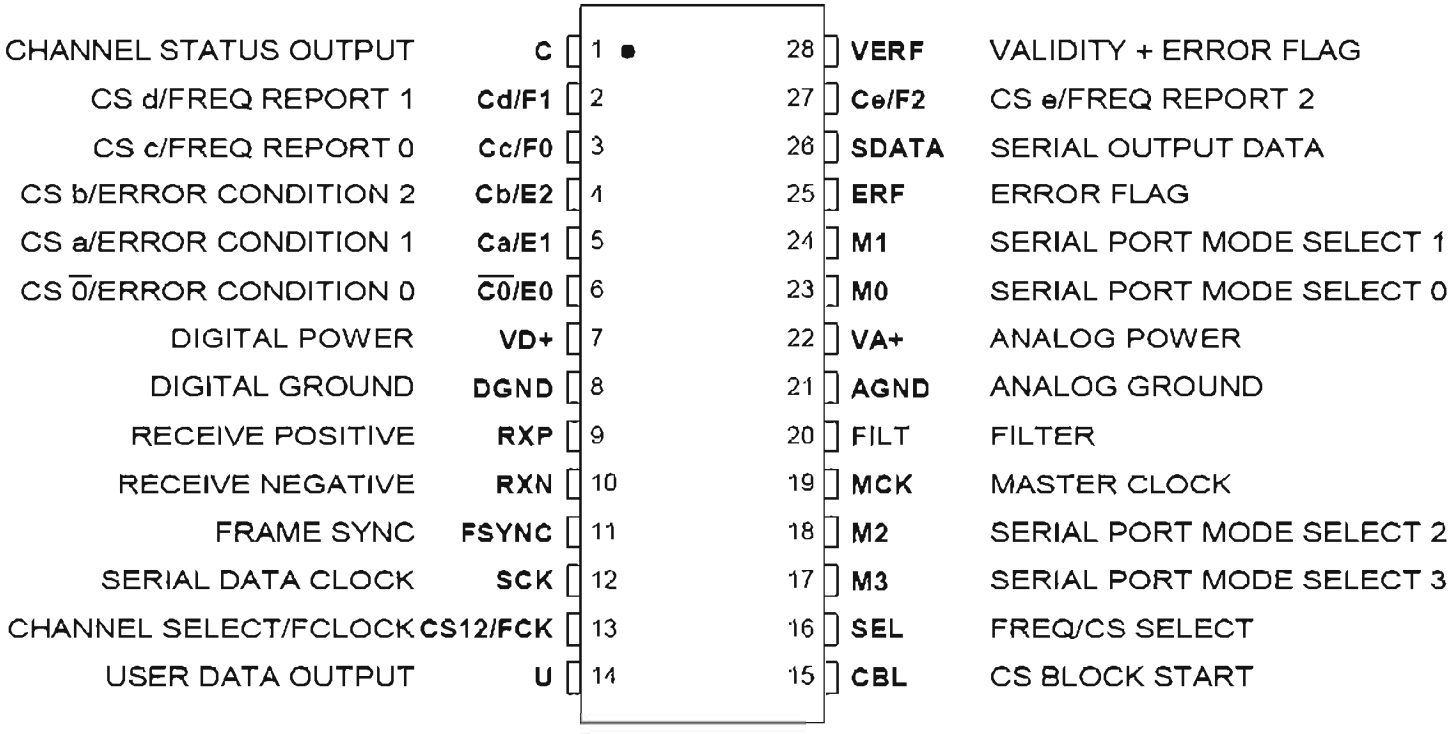

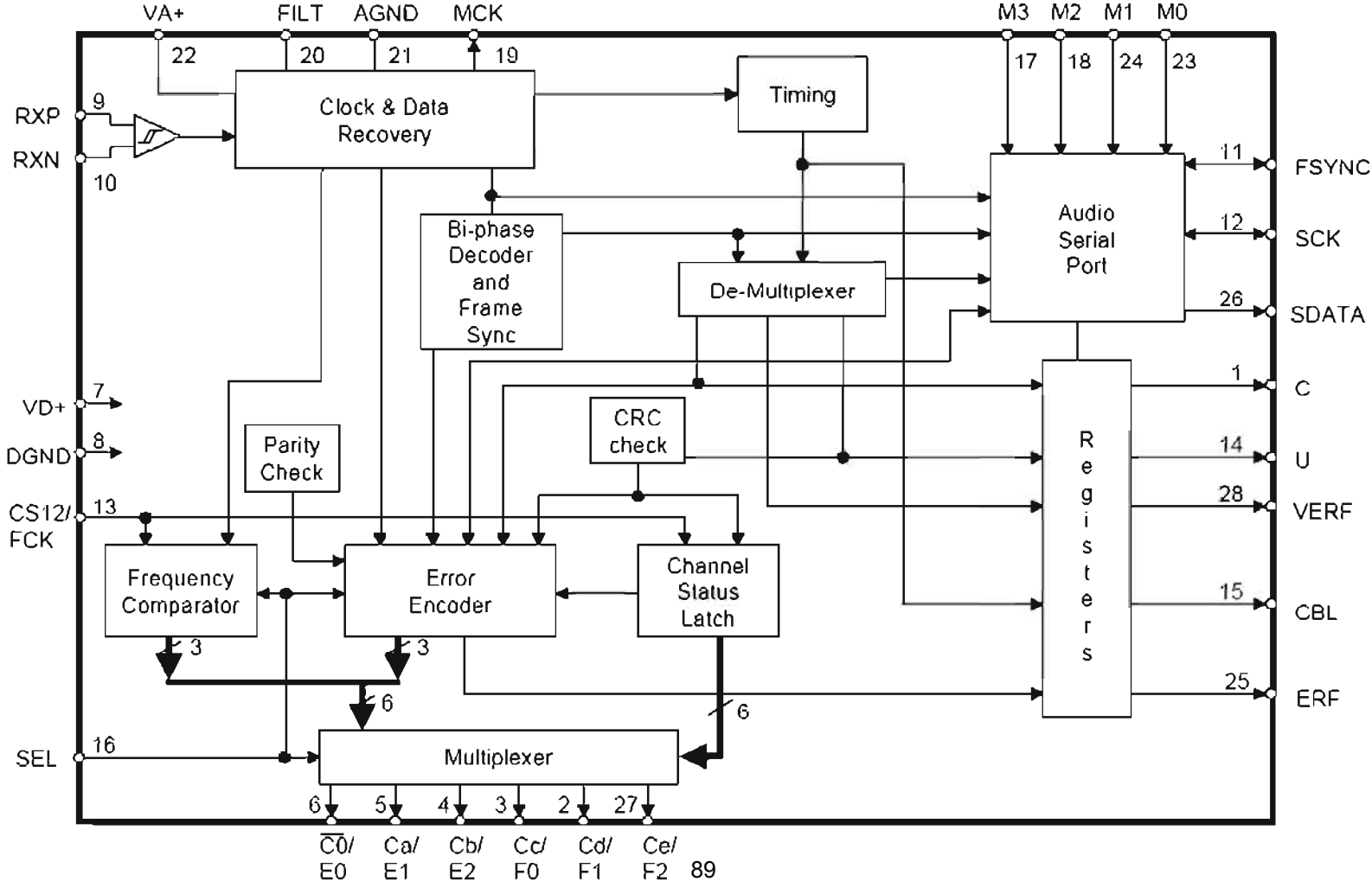

CS8413 CS8414

PIN DESCRIPTIONS: CS8414

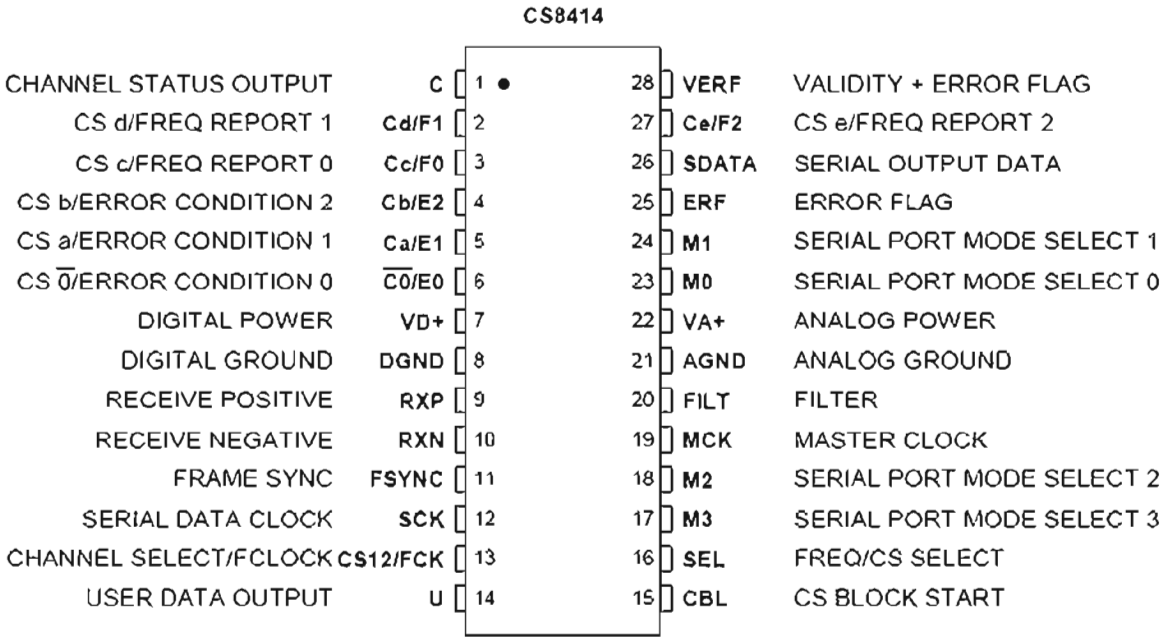

Power Supply Connections

VD+ - Positive Digital Power, PIN 7.

Positive supply for the digital section. Nominally +5 volts.

VA+ - Positive Analog Power, PIN 22.

Positive supply for the analog section. Nominally +5 volts.

DGND - Digital Ground, PIN 8.

Ground for the digital section. DGND should be connected to same ground as AGND.

AGND - Analog Ground, PIN 21.

Ground for the analog section. AGND should be connected to same ground as DGND.

Audio Output Interface

SCK - Serial Clock, PIN 12.

Serial clock for SDATA pin which can be configured (via the M0, M1, M2, and M3 pins) as an input or output, and can sample data on the rising or falling edge. As an output, SCK will generate 32 clocks for every audio sample. As an input, 32 SCK periods per audio sample must be provided in all normal modes.

FSYNC - Frame Sync, PIN 11.

Delineates the serial data and may indicate the particular channel, left or right, and may be an input or output. The format is based on M0, M1, M2, and M3 pins.

SDATA - Serial Data, PIN 26.

Audio data serial output pin.

M0, M1, M2, M3 - Serial Port Mode Select, PINS 23, 24, 18, 17.

Selects the format of FSYNC and the sample edge of SCK with respect to SDATA. M3 selects between eight normal modes (M3 = 0), and six special modes (M3 = 1).

Control Pins

VERF - Validity + Error Flag, PIN 28.

A logical OR'ing of the validity bit from the received data and the error flag. May be used by interpolation filters to interpolate through errors.

U - User Bit, PIN 14.

Received user bit serial output port. FSYNC may be used to latch this bit externally. (Except in I^2S modes when this pin is updated on the active edge of FSYNC.)

C - Channel Status Output, PIN 1.

Received channel status bit serial output port. FSYNC may be used to latch this bit externally. (Except in I^2S modes when this pin is updated on the active edge of FSYNC.)

CBL - Channel Status Block Start, PIN 15.

The channel status block output is high for the first four bytes of channel status and low for the last 20 bytes.

SEL - Select, PIN 16.

Control pin that selects either channel status information (SEL = 1) or error and frequency information (SEL = 0) to be displayed on six of the following pins.

$\overline{C0}$, Ca, Cb, Cc, Cd, Ce - Channel Status Output Bits. PINS 2-6, 27.

These pins are dual function with the 'C' bits selected when SEL is high. Channel status information is displayed for the channel selected by CS12. $\overline{C0}$, which is channel status bit 0, defines professional ($\overline{C0}$ = 0) or consumer ($\overline{C0}$ = 1) mode and further controls the definition of the Ca-Ce pins. These pins are updated with the rising edge of CBL.

CS12 - Channel Select, PIN 13.

This pin is also dual function and is selected by bringing SEL high. CS12 selects sub-frame 1 (when low) or sub-frame 2 (when high) to be displayed by channel status pins $\overline{C0}$ and Ca through Ce.

FCK - Frequency Clock, PIN 13.

Frequency Clock input that is enabled by bringing SEL low. FCK is compared to the received clock frequency with the value displayed on F2 through F0. Nominal input value is 6.144 MHz.

E0, E1, E2 - Error Condition, PINS 4-6.

Encoded error information that is enabled by bringing SEL low. The error codes are prioritized and latched so that the error code displayed is the highest level of error since the last clearing of the error pins. Clearing is accomplished by bring SEL high for more than 8 MCK cycles.

F0, F1, F2 - Frequency Reporting Bits, PINS 2-3, 27.

Encoded sample frequency information that is enabled by bringing SEL low. A proper clock on FCK must be input for at least two thirds of a channel status block for these pins to be valid. They are updated three times per block, starting at the block boundary. These pins are invalid when the PLL is out of lock.

ERF - Error Flag, PIN 25.

Signals that an error has occurred while receiving the audio sample currently being read from the serial port. Three errors cause ERF to go high: a parity or biphase coding violation during the current sample, or an out of lock PLL receiver.

Receiver Interface

RXP, RXN - Differential Line Receivers, PINS 9, 10.

RS422 compatible line receivers.

Phase Locked Loop

MCK - Master Clock, PIN 19.

Low jitter clock output of 256 times the received sample frequency.

FILT - Filter, PIN 20.

An external 470Ω resistor and 0.068μF capacitor is required from FILT pin to analog ground.

KIC9162AF - KIC9163AF

High Voltage Analog Function Switch Array

KIC9163AF

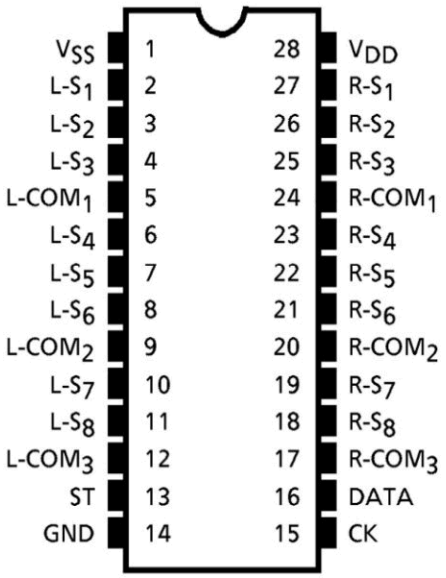

KIC9162AF

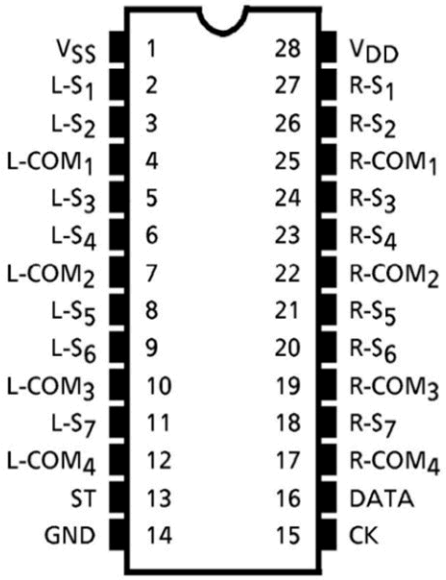

KIC9163AF Block Diagram

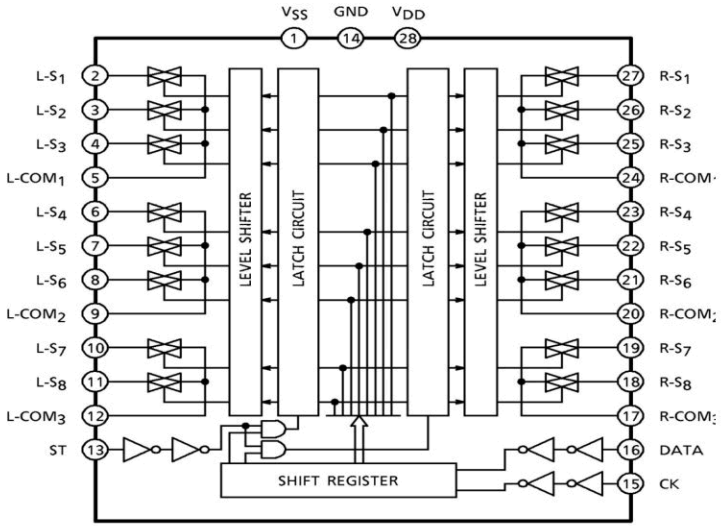

KIC9162AF Block Diagram

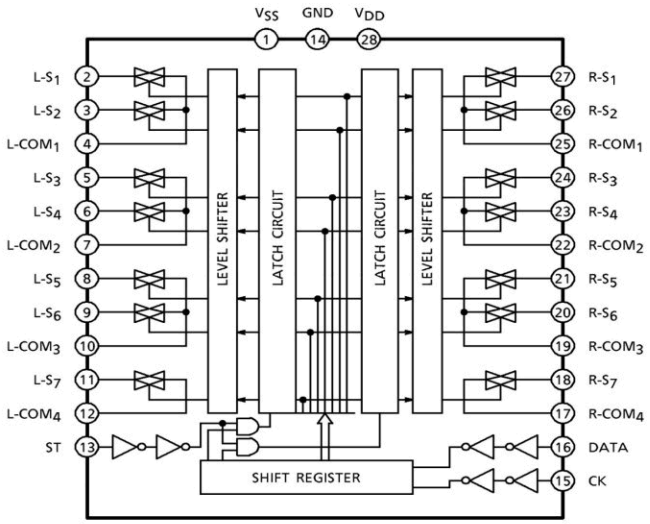

MITSUBISHI MICROCOMPUTERS

M35012-XXXSP, M35013-XXXSP

SCREEN CHARACTER and PATTERN DISPLAY CONTROLLERS

DESCRIPTION

The M35012-XXXSP and M35013-XXXSP are TV screen display control IC which can be used to display information such as program schedules, the date and messages on the TV screen.

The differences among M35012-XXXSP and M35013-XXXSP are noted below.

The descriptions that follow describe the M35013-XXXSP unless otherwise noted.

Type name	M35012-XXXSP	M35013-XXXSP
Characters available	256	128
Data input	16 bits serial input	8 bits serial input
Exclusion function	Exclusion 1 and 2 function	Exclusion 1 function
CONT7F function	Normal/FF_{16} writing mode	Normal/$7F_{16}$ writing mode

For M35013-001SP and M35012-001SP that are standard ROM version of M35013-XXXSP and M35012-XXXSP respectively, the I/O polarity of pin and the character pattern are also mentioned.

PIN CONFIGURATION (TOP VIEW)

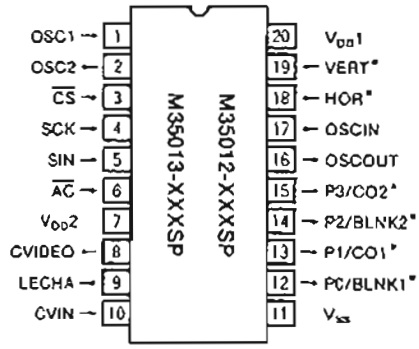

Outline 20P4B

Note : The pins remarked "*" are selectabled the input or output polarity when the character ROM masked.

FEATURES

- Screen composition ····· 24 columns × 10 lines
- Number of characters displayed ····· 240 (Max.)
- Character composition ····· 12 × 18 dot matrix
- Characters available
  - M35013-XXXSP ····· 128 characters
  - M35012-XXXSP ····· 256 characters
- Character sizes available ··· 4 (horizontal) × 4 (vertical)
- Display locations available
  - Horizontal direction ····· 62 locations
  - Vertical direction ····· 64 locations
- Blinking ····· Character units
  - Cycle : approximately 1 second, or approximately 0.5 seconds
  - Duty : 25%, 50%, or 75%
- Data input
  - M35013-XXXSP ····· By the 8-bit serial input function
  - M35012-XXXSP ····· By the 16-bit serial input function
- Coloring
  - Background coloring (composite video signal)
- Blanking
  - Total blanking (14 × 18 dots)
  - Border size blanking
  - Character size blanking
- Synchronization signal
  - Composite synchronization signal generation (PAL, NTSC, M-PAL)
- Synchronized separation circuit ····· Built-In
- 4 output ports (2 digital lines)
- Oscillation stop function
  - Be possible to stop the oscillation for display and for synchronized signal generation
- Exclusion function
  - M35013-XXXSP ····· 1
  - M35012-XXXSP ····· 2
- Reversed character display function

APPLICATION

TV, VCR, Camcorder

MITSUBISHI MICROCOMPUTERS **M35012-XXXSP,M35013-XXXSP**

SCREEN CHARACTER and PATTERN DISPLAY CONTROLLERS

BLOCK DIAGRAM

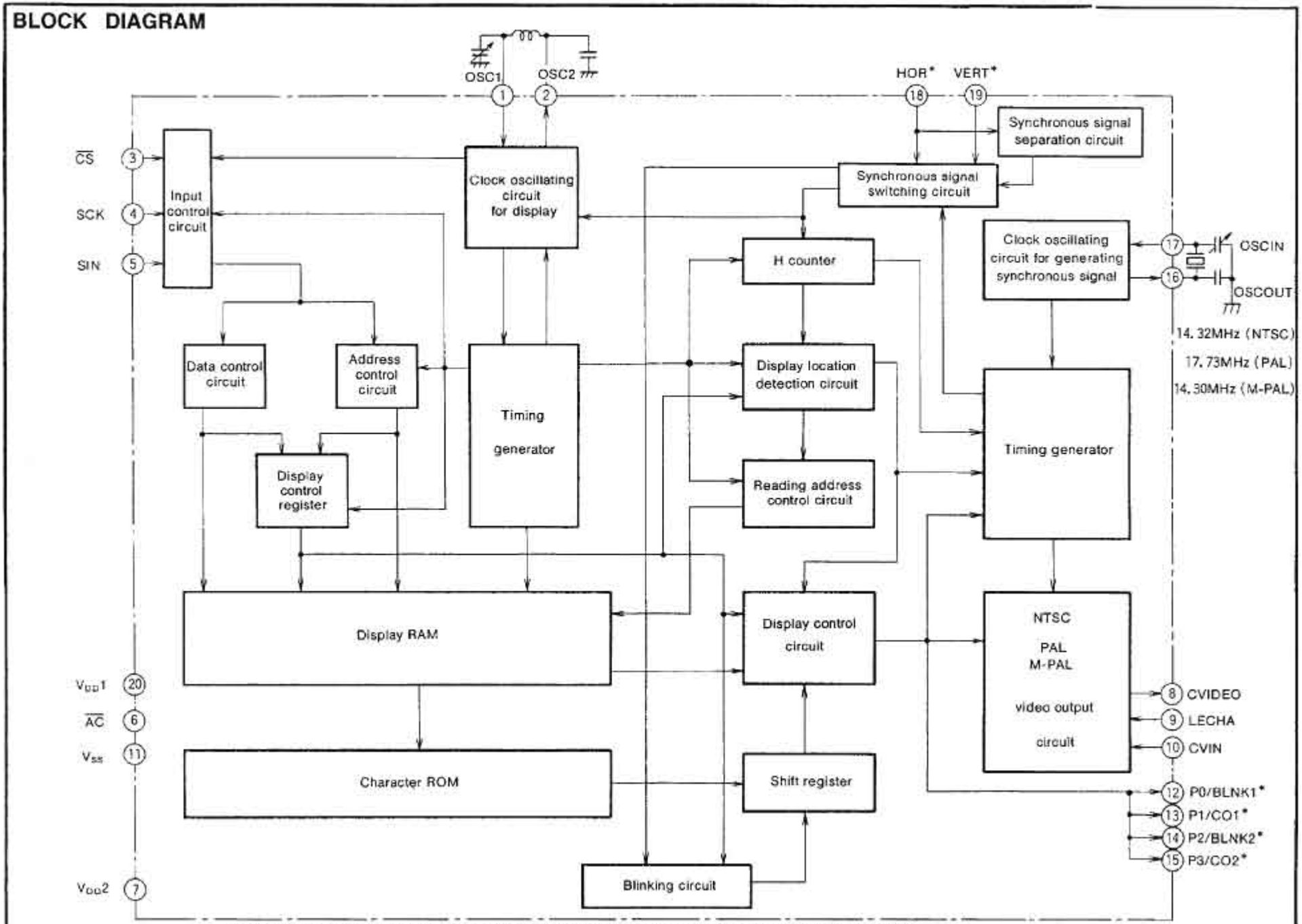

Note : The pins remarked "*" are selectabled the input or output polarity when the character ROM masked.

PIN DESCRIPTION

Pin Number	Symbol	Pin name	Input /Output	Function
1	OSC1	Pins for attachment of external oscillator circuit	Input	There are the pins for attaching an external display oscillator circuit. The standard oscillation frequency is approximately 7MHz. This oscillation frequency determines the horizontal position of the display on the TV screen and the width of the characters.
2	OSC2		Output	
3	$\overline{CS}$	Chip select input	Input	This is the chip select pin, and when serial data transmission is being carried out, it goes to "L". Hysteresis input. Includes built-in pull-up resistor.
4	SCK	Serial clock input	Input	When $\overline{CS}$ pin is "L", SIN serial data is taken in when SCK rises. Hysteresis input. Built-in pull-up resistor is included.
5	SIN	Serial data input	Input	This is the pin for serial input of data and addresses for the display control register and the display data memory. Hysteresis input. Includes built-in pull-up resistor.
6	$\overline{AC}$	Auto-clear input	Input	When "L", this pin resets the internal IC circuit. Hysteresis input. Includes built-in pull-up resistor.
7	$V_{DD}2$	Power pin	—	Please connect to +5V with the analog circuit power pin.
8	CVIDEO	Composite video signal output	Output	This is the output pin for composite video signals. It outputs $2V_{p-p}$ composite video signals. In superimpose mode, character output etc. is superimposed on the external composite video signals from CVIN.
9	LECHA	Character level input	Input	This is the input pin which determines the "white" character color level in the composite video signal.
10	CVIN	Composite video signal input	Input	This is the input pin for external composite video signals. In superimpose mode, character output etc. is superimposed on these external composite video signals.
11	V_{SS}	Earthing pin	—	Please connect to GND using circuit earthing pin.
12	P0	Port P0 output	Output	This pin can be toggled between port pin output and BLNK1* (character background) signal output. Polarity can be selected when the character ROM is masked.
13	P1	Port P1 output	Output	This pin can be toggled between port pin output and CO1* (character) signal output. Polarity can be selected when the character ROM is masked.
14	P2	Port P2 output	Output	This pin can be toggled between port pin output and BLNK2* (character background) signal output. Polarity can be selected when the character ROM is masked.
15	P3	Port P3 output	Output	This pin can be toggled between port pin output and CO2* (character) signal output. Polarity can be selected when the character ROM is masked.
16	OSCOUT	Pins for attachment of external oscillator circuit for synchronization signal generation	Output	These are the pins for attaching an external oscillator circuit for generating the synchronization signal. An oscillation of 14.32MHz is needed for NTSC, 17.73MHz is needed for PAL and 14.30MHz is needed for M-PAL.
17	OSCIN		Input	
18	HOR*	Horizontal synchronization signal input	Input	This pin inputs the horizontal synchronization signal. Hysteresis input. Polarity can be selected when the character ROM is masked.
19	VERT*	Vertical synchronization signal input	Input	This pin inputs the vertical synchronization signal. Hysteresis input. Polarity can be selected when the character ROM is masked.
20	$V_{DD}1$	Power pin	—	Please connect to +5V with the digital circuit power pin.

Note : The pins remarked "*" are selectabled the input or output polarity when the character ROM masked.

NJM2068

LOW-NOISE DUAL OPERATIONAL AMPLIFIER

■ GENERAL DESCRIPTION

The NJM2068 is a high performance, low noise dual operational amplifier. This amplifier features popular pin-out, superior noise performance, and superior total harmonic distortion. This amplifier also features guaranteed noise performance with substantially higher gain-bandwidth product and slew rate, which far exceeds that of the 4558 type amplifier. The specially designed low noise input transistors allow the NJM2068 to be used in very low noise signal processing applications such as audio preamplifiers and servo error amplifier.

■ PACKAGE OUTLINE

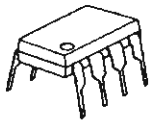

NJM2068D

NJM2068M

NJM2068V

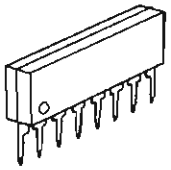

NJM2068L

■ FEATURES

- Operating Voltage (±4V~±18V)
- Low Total Harmonic Distortion (0.001% typ.)
- Low Noise Voltage (FLAT+JISA,0.56μV typ.)
- High Slew Rate (6V/μs typ.)
- Unity Gain Bandwidth (27MHz @ f=10kHz)
- Package Outline DIP8,DMP8,SIP8,SSOP8
- Bipolar Technology

■ PIN CONFIGURATION

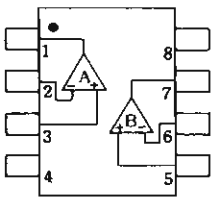

NJM2068D
NJM2068M
NJM2068V

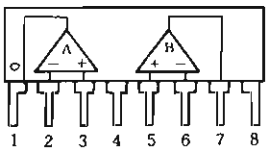

NJM2068L

PIN FUNCTION
1.A OUTPUT
2.A –INPUT
3.A +INPUT
4.V⁻
5.B +INPUT
6.B –INPUT
7.B OUTPUT
8.V⁺

■ EQUIVALENT CIRCUIT (1/2 Shown)

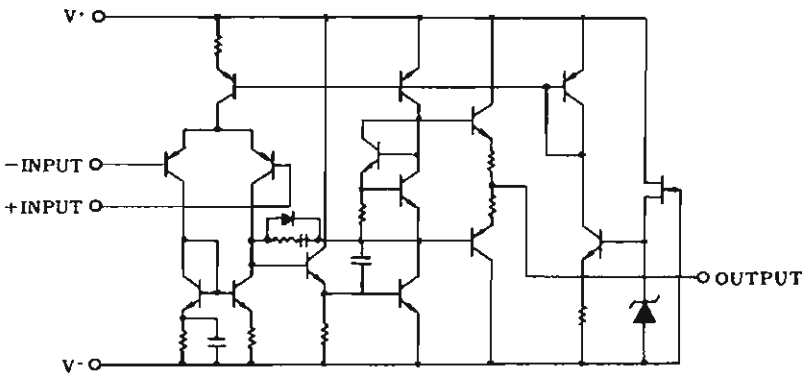

NJM2296

5-INPUT 3PUTPUT VIDEO SW

■GENERAL DESCRIPTION

The NJM2296 is a 5-input 3-output video switch.
Its switches select one from five signals received from VTR, TV, TV GAME and others.
This IC is designed for audio items, such as AV amplifier and receivers, and others

■PACKAGE OUTLINE

NJM2296D NJM2296M

■FEATURES

- ●5-input 3-output
- ●Operating Voltage ±4.0 to ±6.5V
- ●Operating Current ±31mA typ. at Vcc=±5V
- ●Crosstalk -65dB typ.
- ●Internal 6dB Amplifier
- ●Internal 75Ω Driver
- ●Bipolar Technology
- ●Package Outline DIP16,DMP16

■BLOCK DIAGRAM

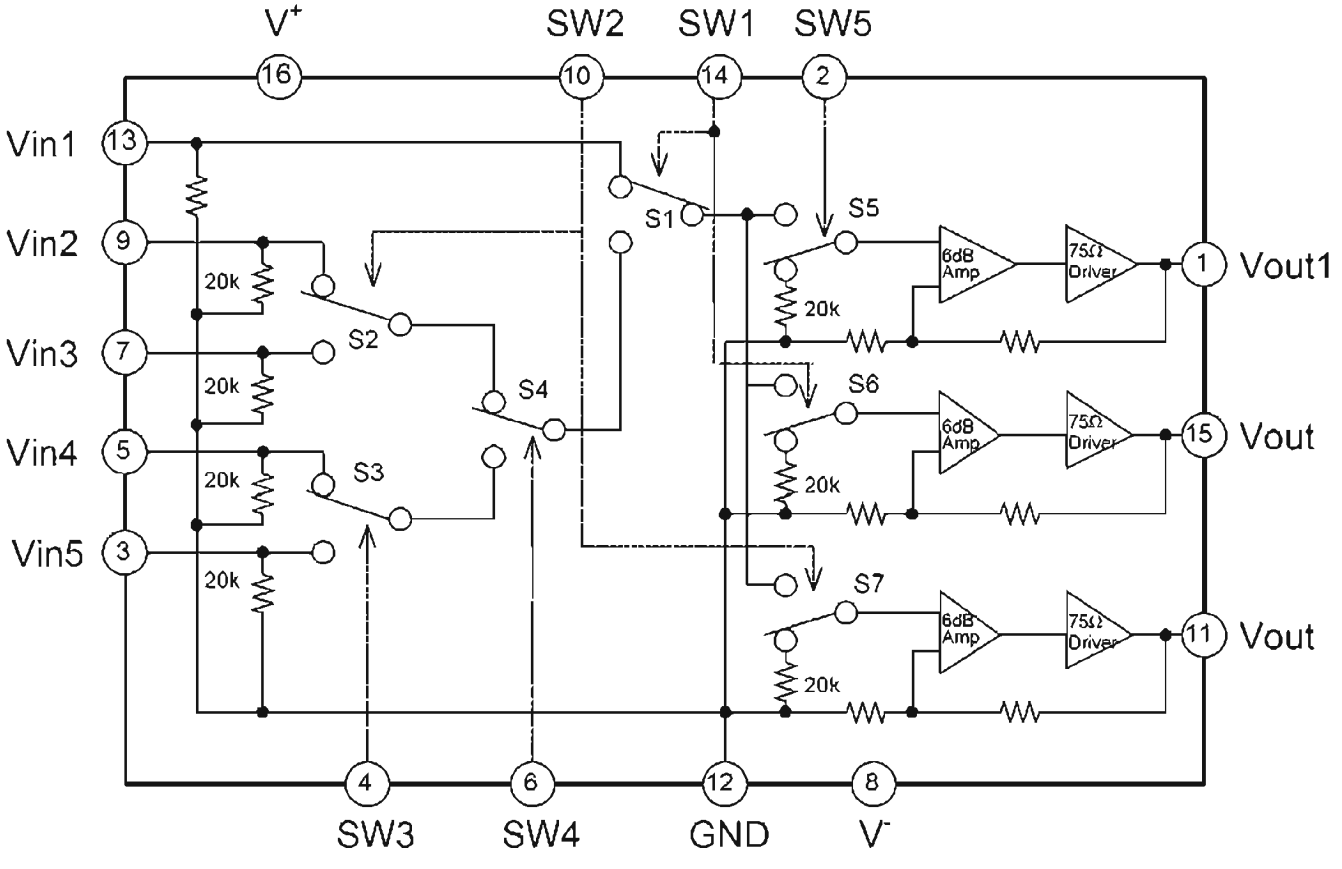

NJM4556A

DUAL HIGH CURRENT OPERATIONAL AMPLIFIER

■ GENERAL DESCRIPTION

The NJM4556A integrated circuit is a high-gain, high output current dual operational amplifier capable of driving ±70mA into 150 Ω loads (±10.5V output voltage), and operating low supply voltage ($V^+/V^-=\pm 2V\sim$).

The NJM4556A combines many of the fetures of the popular NJM4558 as well as having the capability of driving 150Ω loads. In addition, the wide band-width, low noise, high slew rate and low distortion of the NJM4556A make it ideal for many audio, telecommunications and instrumentation applications.

■ PACKAGE OUTLINE

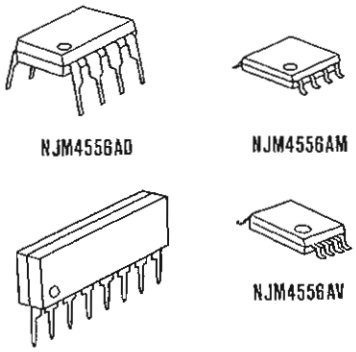

■ FEATURES

- Operating Voltage (±2V～±18V)
- High Output Current (Io=70mA)
- Slew Rate (3V/μs typ.)
- Gain Band Width Product (8MHz typ.)
- Package Outline DIP8, DMP8, SIP8, SSOP8
- Bipolar Technology

■ PIN CONFIGURATION

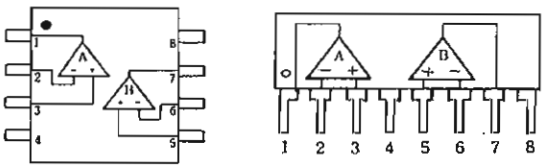

NJM4556AD
NJM4556AM
NJM4556AV

NJM4556AL

PIN FUNCTION
1. A OUTPUT
2. A−INPUT
3. A+INPUT
4. V⁻
5. B+INPUT
6. B−INPUT
7. B OUTPUT
8. V⁺

■ EQUIVALENT CIRCUIT (1/2 Shown)

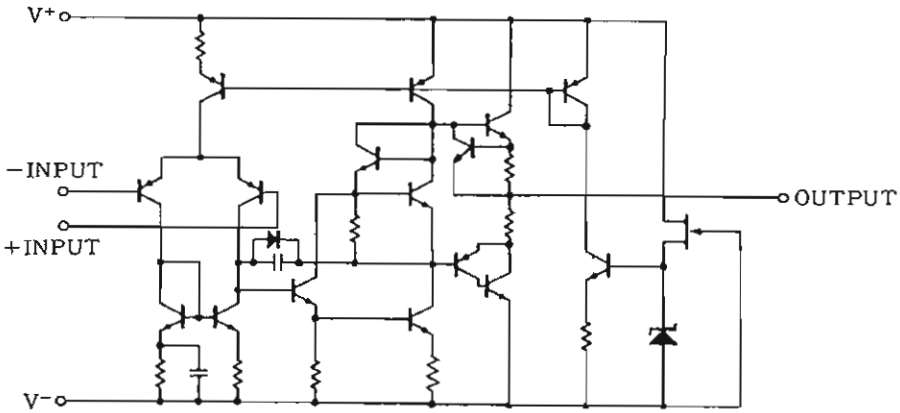

NJU201A

C-MOS QUAD SPST ANALOG SWITCH

■ GENERAL DESCRIPTION

The NJU201A is a quad break-before-make SPST analog switch protected up to 44V operating voltage.

All switches are controlled by TTL or C-MOS compatible input.

The low on-state resistance is about half compare with the NJU7301.

The NJU201A is functionally and pin-to-pin compatible with SILICONIX DG201A.

■ PACKAGE OUTLINE

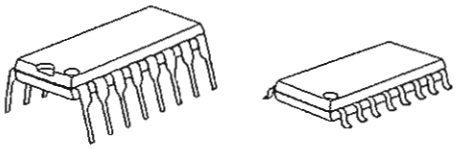

NJU201AD NJU201AM

■ FEATURES

- High Break Down Voltage -- 44V
- Low On-state Resistance
- Package Outline -- DIP/DMP 16
- C-MOS Technology

■ PIN CONFIGURATION

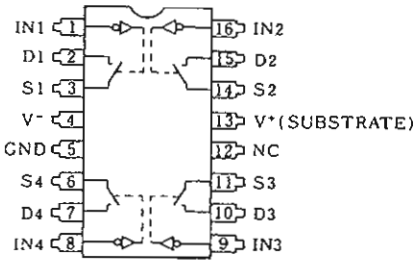

■ TRUTH TABLE

Logic (In)	Switch
0	ON
1	OFF

■ EQUIVALENT CIRCUIT

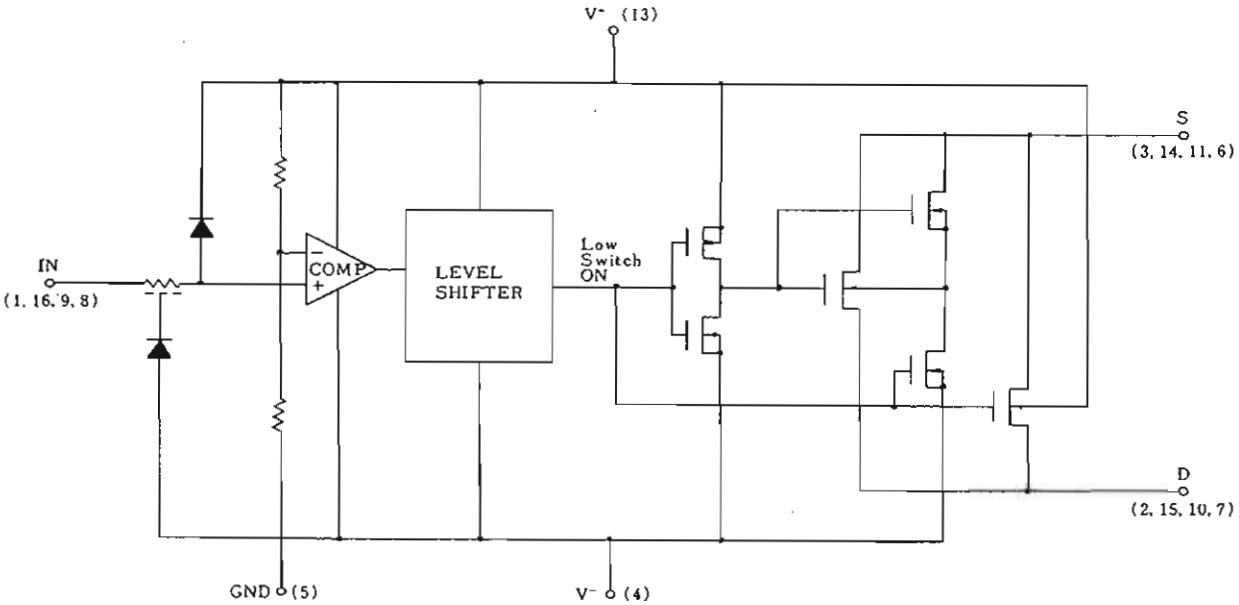

* Logic input threshold voltage V_{TH} is about V^+ x 0.128(V).
When the designing, enough margin is required.

QUARTZ CRYSTAL OSCILLATOR

■ GENERAL DESCRIPTION

The NJU6324 series is a C-MOS quartz crystal oscillator which consists of an oscillation amplifier, 3-stage divider and 3-state output buffer.

The oscillation frequency is as wide as up to 50MHz and the symmetry of 45-55% is realized over full oscillation frequency range.

The oscillation amplifier incorporates feed-back resistance and oscillation capacitors(Cg, Cd), therefore, it requires no external component except quartz crystal.

The 3-stage divider generates f_o, $f_o/2$, $f_o/4$ and $f_o/8$ and only one frequency selected by internal circuits is output

The 3-state output buffer is C-MOS compatible and capable of 10 LSTTL driving.

■ FEATURES

- Operating Voltage -- 3.0~6.0V
- Maximum Oscillation Frequency -- 50MHz
- Low Operating Current
- High Fan-out -- LSTTL 10
- 3-state Output Buffer
- Selected Frequency Output (mask option)
  Only one frequency out of f_o, $f_o/2$, $f_o/4$ and $f_o/8$ output
- Oscillation Capacitors Cg and Cd on-chip
- Oscillation and/or Output Stand-by Function
- Package Outline -- CHIP/EMP 8
- C-MOS Technology

■ LINE-UP TABLE

Type No.	Output Frequency	Cg	Cd
NJU6324L	f_o	23pF	23pF
NJU6324M	$f_o/2$	23pF	23pF
NJU6324N	$f_o/4$	23pF	23pF
NJU6324U	$f_o/8$	23pF	23pF

■ PACKAGE OUTLINE

NJU6324XC

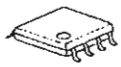

NJU6324XE

■ PIN CONFIGURATION/PAD LOCATION

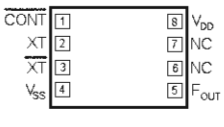

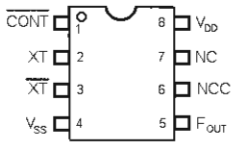

■ COORDINATES

Unit: μm

No.	PAD	X	Y
1	$\overline{CONT}$	170	649
2	XT	170	483
3	$\overline{XT}$	170	316
4	V_{SS}	170	143
5	F_{OUT}	1094	143
6	NC	-	-
7	NC	1094	462
8	V_{DD}	1094	649

Chip Size : 1.24 X 0.8mm
Chip Thickness : 400μm±30μm
(Note) No. 6 and 7 terminals are only for package type information. There is No.7 PAD on the chip but no No.6.

■ BLOCK DIAGRAM

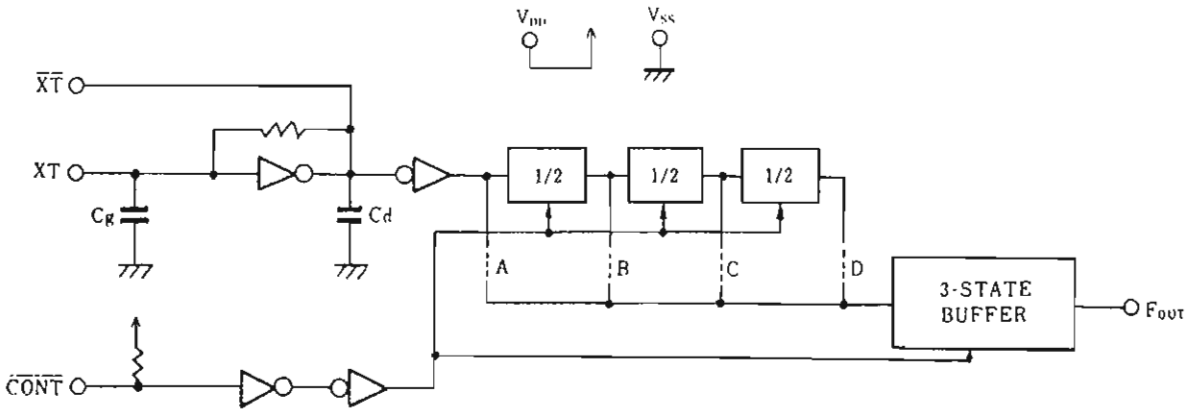

TOSHIBA CMOS DIGITAL INTEGRATED CIRCUIT SILICON MONOLITHIC

TC74VHC240F, TC74VHC240FW, TC74VHC240FT
TC74VHC244F, TC74VHC244FW, TC74VHC244FT

OCTAL BUS BUFFER

TC74VHC240F / FW / FT INVERTED, 3 - STATE OUTPUTS

TC74VHC244F / FW / FT NON - INVERTED, 3 - STATE OUTPUTS

(Note) The JEDEC SOP (FW) is not available in Japan.

The TC74VHC240 and 244 are advanced high speed CMOS OCTAL BUS BUFFERs fabricated with silicon gate C²MOS technology.
They achieve the high speed operation similar to equivalent Bipolar Schottky TTL while maintaining the CMOS low power dissipation.
The 74VHC240 is an inverting 3 - state buffer having two active - low output enables. The TC74VHC244 is a non - inverting 3 - state buffer, and has two active - low output enables.
These devices are designed to be used with 3 - state memory address drivers, etc.
An input protection circuit ensures that 0 to 7V can be applied to the input pins without regard to the supply voltage. This device can be used to interface 5V to 3V systems and two supply systems such as battery back up. This circuit prevents device destruction due to mismatched supply and input voltages.

FEATURES :

- High Speed ..... t_{pd} = 3.9ns(typ.) at V_{CC} = 5V
- Low Power Dissipation ..... I_{CC} = 4μA(Max.) at Ta = 25°C
- High Noise Immunity ..... $V_{NIH} = V_{NIL}$ = 28% V_{CC} (Min.)
- Power Down Protection is provided on all inputs.
- Balanced Propagation Delays ..... $t_{pLH} \simeq t_{pHL}$
- Wide Operating Voltage Range .... V_{CC} (opr) = 2V ~ 5.5V
- Low Noise ..... V_{OLP} = 0.9V (Max.)
- Pin and Function Compatible with 74ALS240/244

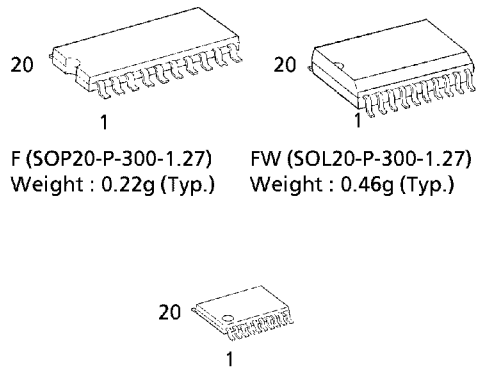

F (SOP20-P-300-1.27) Weight : 0.22g (Typ.)

FW (SOL20-P-300-1.27) Weight : 0.46g (Typ.)

FT (TSSOP20-P-0044-0.65) Weight : 0.08g (Typ.)

TRUTH TABLE

INPUTS		OUTPUTS	
$\overline{G}$	A_n	Y_n	$\overline{Y}_n$
L	L	L	H
L	H	H	L
H	X	Z	Z

X : Don't Care
Z : High Impedance
Y_n : TC74VHC244
$\overline{Y}_n$: TC74VHC240

PIN ASSIGNMENT

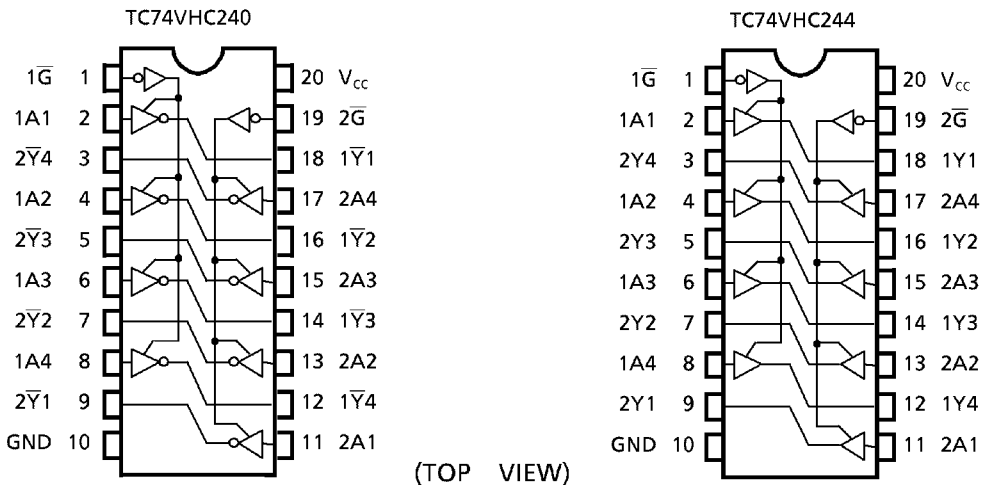

961001EBA2

IEC LOGIC SYMBOL

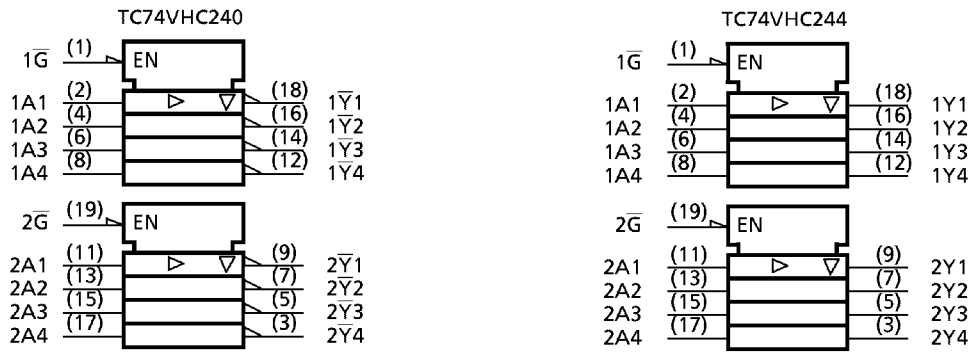

ABSOLUTE MAXIMUM RATINGS

PARAMETER	SYMBOL	VALUE	UNIT
Supply Voltage Range	V_{CC}	−0.5~7.0	V
DC Input Voltage	V_{IN}	−0.5~7.0	V
DC Output Voltage	V_{OUT}	−0.5~V_{CC}+0.5	V
Input Diode Current	I_{IK}	−20	mA
Output Diode Current	I_{OK}	±20	mA
DC Output Current	I_{OUT}	±25	mA
DC V_{CC}/Ground Current	I_{CC}	±75	mA
Power Dissipation	P_D	180	mW
Storage Temperature	T_{stg}	−65~150	°C

RECOMMENDED OPERATING CONDITIONS

PARAMETER	SYMBOL	VALUE	UNIT
Supply Voltage	V_{CC}	2.0~5.5	V
Input Voltage	V_{IN}	0~5.5	V
Output Voltage	V_{OUT}	0~V_{CC}	V
Operating Temperature	T_{opr}	−40~85	°C
Input Rise and Fall Time	dt / dv	0~100 (V_{CC} = 3.3 ± 0.3V) 0~20 (V_{CC} = 5 ± 0.5V)	ns / V

TC9273N

CMOS Digital IC

BLOCK DIAGRAM

TC9273N, TC9273F

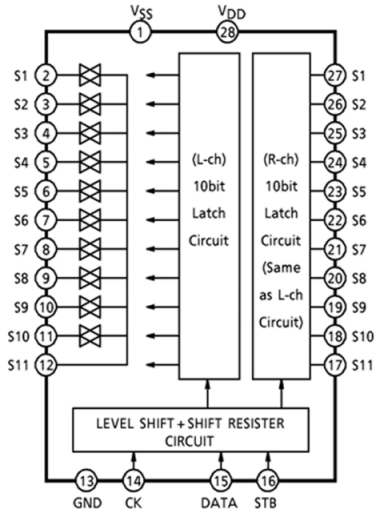

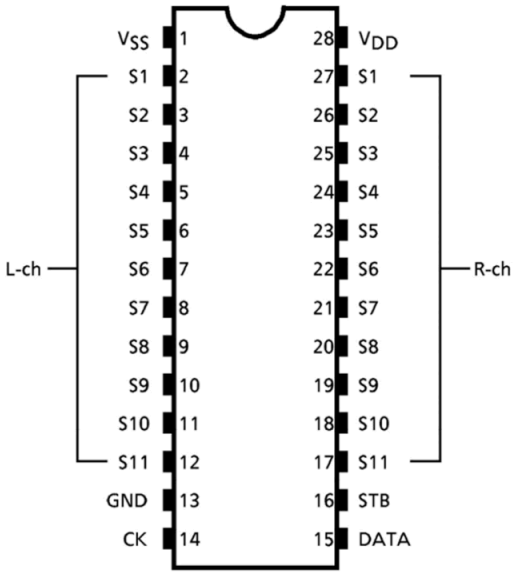

PIN FUNCTION (Left channel / right channel)

PIN No.			SYMBOL	PIN NAME	FUNCTION AND OPERATION	NOTE
TC9273N / F	TC9274N	TC9274F				
1	1	40	V_{SS}	Negative power supply pin	Dual power supply: V_{DD} = 8.0~17V, GND = 0V, V_{SS} = −8.0~−17V	—
13	20	16	GND	Digital ground pin		
28	42	38	V_{DD}	Positive power supply pin	Single power supply: V_{DD} = 8.0~18V, V_{SS} = GND = 0V	
2 / 27	2 / 41	41 / 37	S1	Input / output pins	Analog switch input pins. 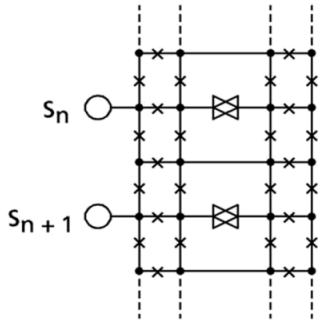 × : Aluminum mask switch. ● : Open or closed can be specified. Connection for right and left channels can be different.	—
3 / 26	3 / 40	42 / 36	S2			
4 / 25	4 / 39	43 / 35	S3			
5 / 24	5 / 38	44 / 34	S4			
6 / 23	6 / 37	1 / 33	S5			
7 / 22	7 / 36	2 / 32	S6			
8 / 21	8 / 35	3 / 31	S7			
9 / 20	9 / 34	4 / 30	S8			
10 / 19	10 / 33	5 / 29	S9			
11 / 18	11 / 32	6 / 28	S10			
12 / 17	12 / 31	7 / 27	S11			
—	13 / 30	8 / 26	S12			
—	14 / 29	9 / 25	S13			
—	15 / 28	10 / 24	S14			
—	16 / 27	11 / 23	S15			
—	17 / 26	12 / 22	S16			
—	18 / 25	13 / 21	S17			
—	19 / 24	14 / 20	S18			
—	—	17 / 39	NC	Not connected	—	—
14	21	16	CK	Clock input pin	Clock input for data transfer	Low threshold value input pins
15	22	18	DATA	Data input pin	Serial data input for setting switches	
16	23	19	STB	Strobe input pin	Strobe input for data writing	

TOSHIBA CMOS DIGITAL INTEGRATED CIRCUIT SILICON MONOLITHIC

TC9459N, TC9459F

ELECTRONIC VOLUME CONTROL

The TC9459N, TC9459F are electronic volume control ICs developed for use in home stereos and other audio equipment.
Using serial data input from external sources, it controls the sound volume, balance and loudness circuits.

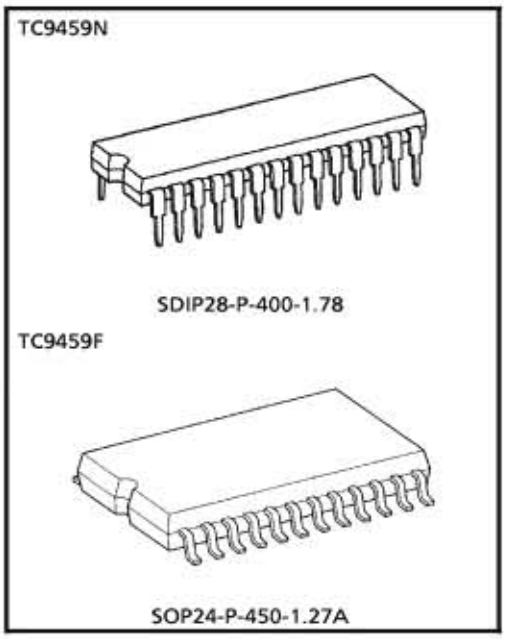

Weight
SDIP28-P-400-1.78 : 2.2g (Typ.)
SOP24-P-450-1.27A : 0.44g (Typ.)

FEATURES

- Sound volume can be controlled in 91 steps from 0 to −89dB or up to an infinite level in 1dB increments.
- Incorporating two channels of volume control circuits, the device allows independent volume control : therefore, it also provides the balancing function.
- A loudness circuit (20dB tap) is built in.
- Can operate with a single or dual power supplies.
- Can control up to 4 chips on the same bus by using chip select input.
- Thanks to its polysilicon resistor, the device allows you to configure a low-distortion, high-performance volume control system.

Pin Connections

TC9459N

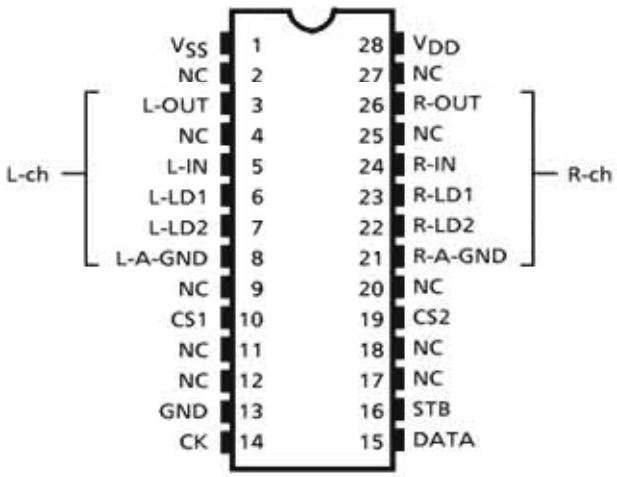

TC9459F

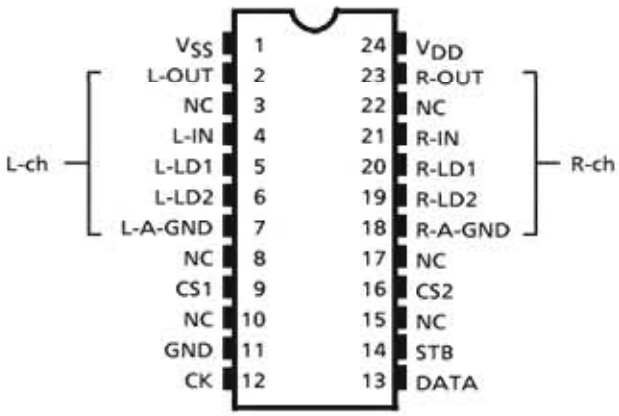

TC9459N/F

PIN DESCRIPTION

Numeral in ( ) means the pin No. of TC9459F.

PIN No.	SYMBOL	PIN NAME	FUNCTION	REMARK
1 (1)	V_{SS}	Negative power supply pin	When using dual power supplies: V_{DD} = 6.0~17V, GND = 0V, V_{SS} = −6.0~−17V When using a single power supply: V_{DD} = 6.0~18V, GND = V_{SS} = 0V	—
28 (24)	V_{DD}	Positive power supply pin		
13 (11)	GND	Digital GND pin		
3 (2)	L-OUT	Volume output pin	• Volume circuit 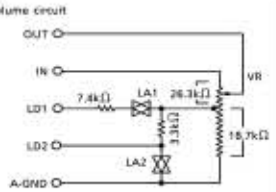	—
26 (23)	R-OUT			
5 (4)	L-IN	Volume input pin		
24 (21)	R-IN			
6 (5)	L-LD1	Loudness tap output pin		
23 (20)	R-LD1			
7 (6)	L-LD2			
22 (19)	R-LD2			
8 (7)	L-A-GND	Analog GND pin		
21 (18)	R-A-GND			
10 (9)	CS1	Chip select input pin	Up to 4 chips on the same bus can be used by switching over chip select code.	—
19 (16)	CS2			
14 (12)	CK	Clock input pin	Data transfer clock input	Low threshold value input pin
15 (13)	DATA	Data input pin	Volume setup serial data input	
16 (14)	STB	Strobe input pin	Data write strobe input	
2 (3)	NC	No connection	—	—
27 (22)				
4				
25				
9 (8)				
20 (17)				
11				
18				
12 (10)				
17 (15)				

	LA1	LA2
LOUDNESS "ON"	ON	OFF
LOUDNESS "OFF"	OFF	ON

BLOCK DIAGRAM (TC9459F)

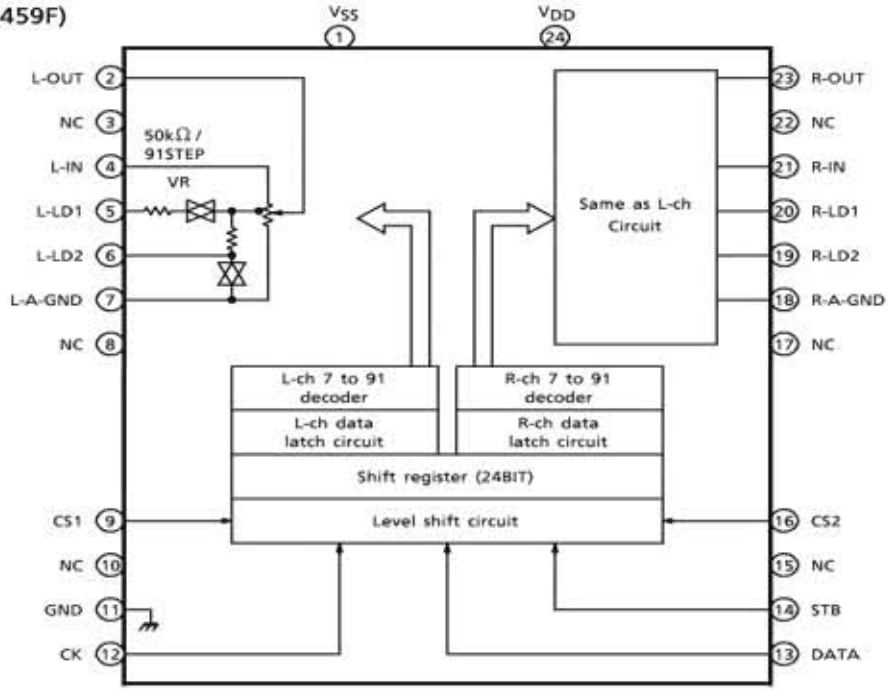

TOSHIBA CMOS DIGITAL INTEGRATED CIRCUIT SILICON MONOLITHIC

TC9482N, TC9482F

SYSTEM ELECTRONIC VOLUME CONTROL

The TC9482N and TC9482F are six-channel electronic volume control ICs developed for Hi-Fi audio equipment. Since all six channels can be individually controlled, the devices are optimum for audio equipment with multiple outputs.

TC9482N

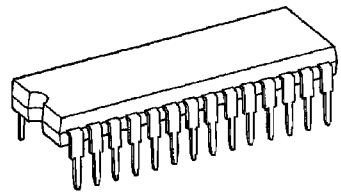

SDIP28-P-400-1.78

TC9482F

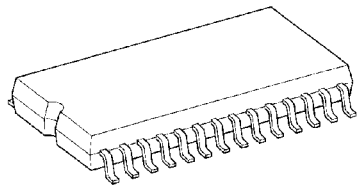

SOP28-P-450-1.27

Weight
SDIP28-P-400-1.78 : 2.2 g (Typ.)
SOP28-P-450-1.27 : 0.8 g (Typ.)

FEATURES

- Sound volume can be controlled in 97 steps from 0 to −95dB or up to an infinite level in 1dB increments.
- Incorporating six channels of volume control circuits, the device allows independent volume control.
- Can operate with a single or dual power supplies.
- Can control up to 4 chips on the same bus by using chip select input.
- Built-in interface for 5-V microcomputers.
- Thanks to its polysilicon resistor, the device allows you to configure a low-distortion, high-performance volume control system.
- Two packages supported: 28-pin shrink DIP and 28-pin flat package.

PIN CONNECTIONS

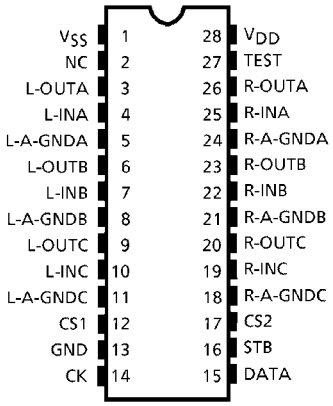

BLOCK DIAGRAM

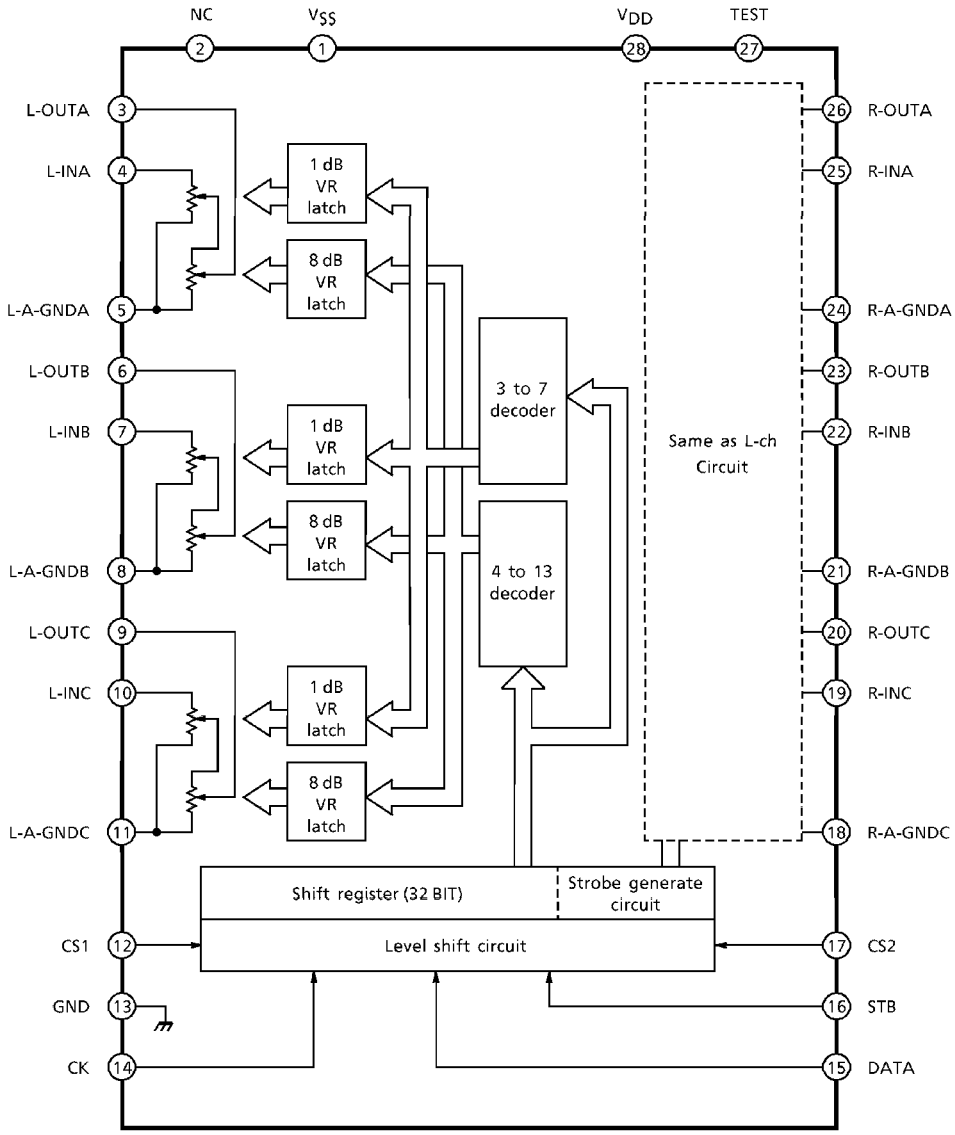

3-Terminal 1.5A Negative Adjustment Regulator IC

KA337

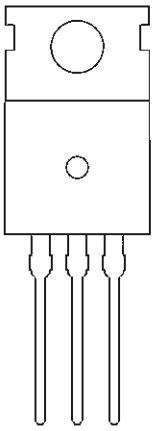

1. Adj.
2. Input
3. Output

Low Saturation Voltage Type 3-Pin Regulator IC

BA033T

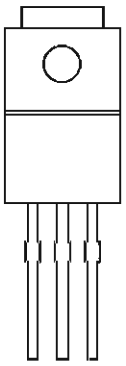

1 2 3

1 Vcc
2 Ground
3 Out

Photocoupler IC

PC-17T1

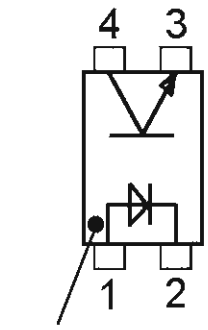

POSITIVE REGULATORS VARIOUS STYLES 7805, 7815

SOT-89

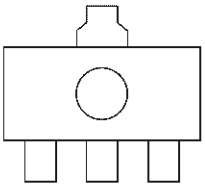

1.OUT
2.GND
3.IN

1 2 3

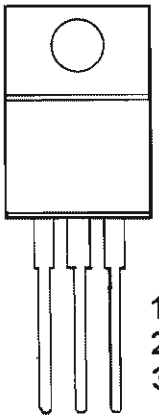

1. IN
2. GROUND
3. OUT

1 2 3

SO-8 Plastic (M) (Narrow Body)

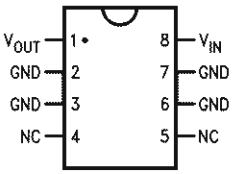

Top View

(TO-92) Plastic Package (Z)

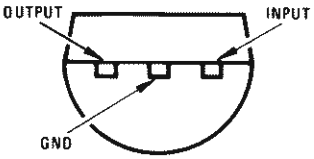

Bottom View

TO-252

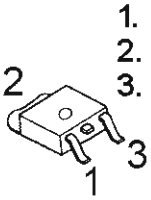

1. IN
2. GRD
3. OUT

NEGATIVE REGULATORS VARIOUS STYLES 7905, 7915

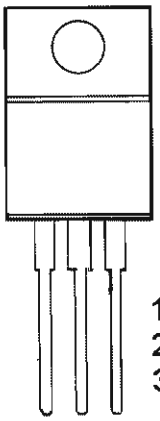

1. GROUND
2. IN
3. OUT

1 2 3

SO-8 Plastic (Narrow Body)

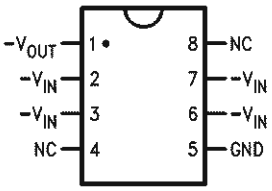

Top View

TO-92 Plastic Package (Z)

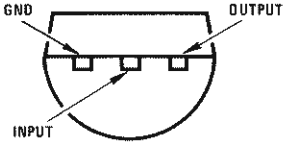

Bottom View

Silicon Transistor

2SA1859 PNP
2SC4883 NPN

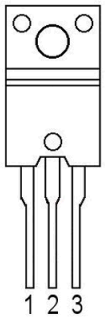

1 Base
2 Collector
3 Emitter

Small Signal Bi-Polar PNP Transistor

2SA933AS

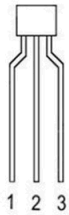

1 Emitter
2 Collector
3 Base

Silicon Transistor

2SA1986, 2SA1941, 2SB1560 PNP
2SC5198, 2SC5358, 2SD2390 NPN

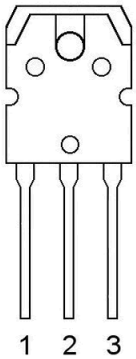

1 Base
2 Collector (Heat Sink)
3 Emitter

KTC3206

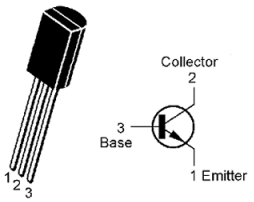

KRC107
KTA1268
KTA1266
KTA1024

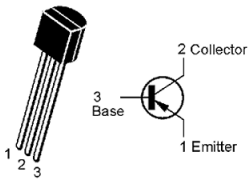

EPITAXIAL PLANAR TRANSISTOR

KTC3200
KTC2874
KTC3198
KRA107M PNP

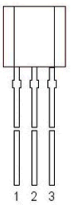

1 Emitter
2 Collector
3 Base

Silicon PNP Transistor

2SA1740S
DTA114TSA

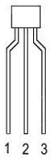

1 Emitter
2 Collector
3 Base

MPSA06

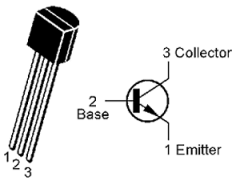

MPSA56

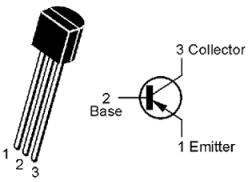

DTA114YSA
DTC114YSA NPN

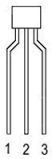

1) Ground
2) In
3) Out

KTD1302

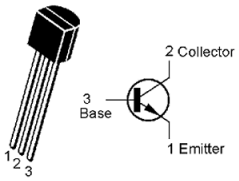

KRA107S PNP
KTD1304 NPN
KRC111S NPN
DTC114TKA NPN
DTC114YKA NPN

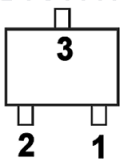

1) Emitter
2) Base
3) Collector

2SC4137

1. Emitter
2. Collector
3. Base

Silicon NPN Transistor

DTC114TSA

1 Emitter
2 Collector
3 Base

2SK117

FET

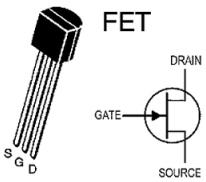

DTA114YKA

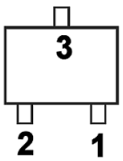

1) Ground
2) In
3) Out

AVR110/210/310/510/2000/3000/4000/5000 SCHEMATIC DIAGRAM MP

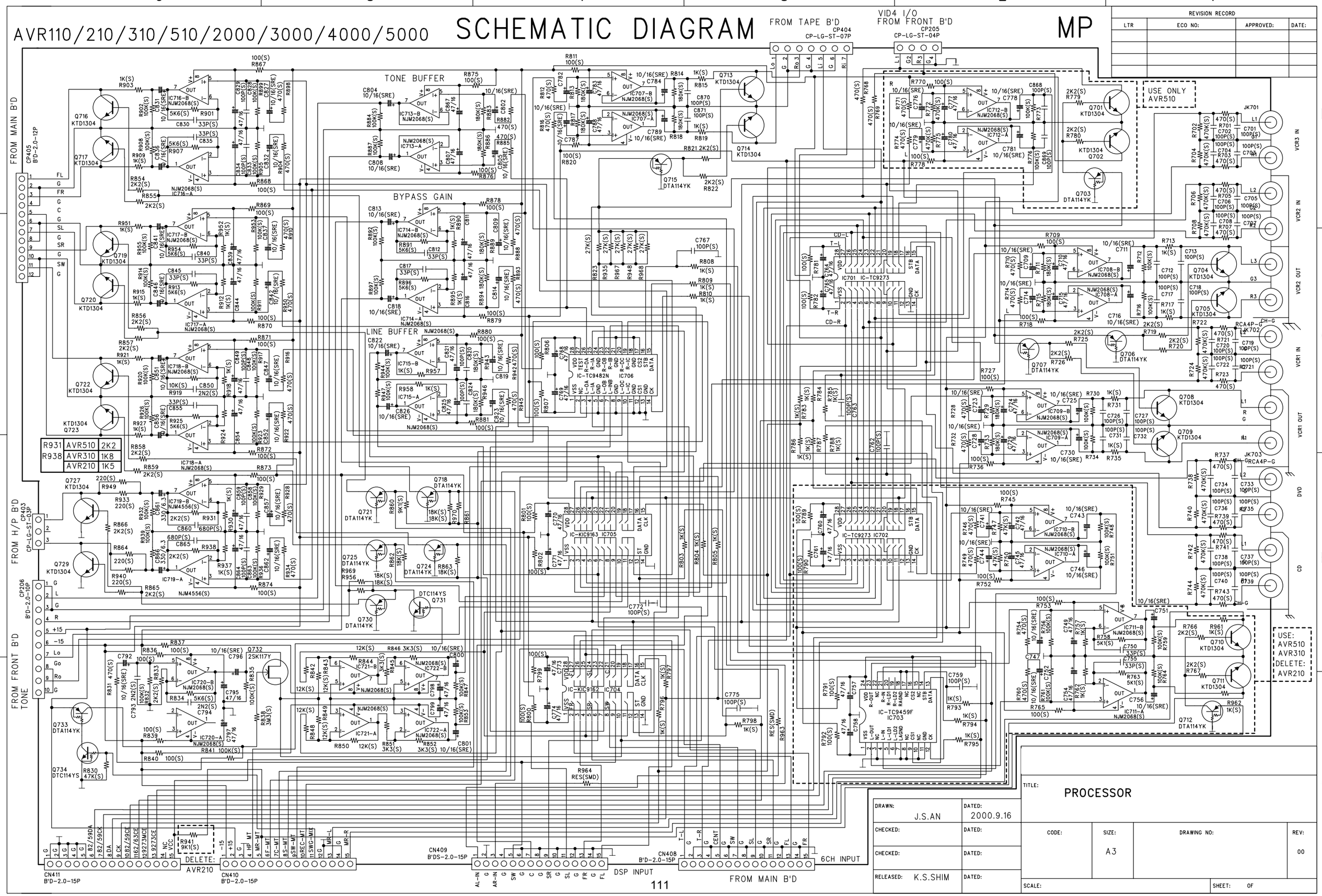

REVISION RECORD			
LTR	ECO NO:	APPROVED:	DATE:

DRAWN: J.S.AN	DATED: 2000.9.16	TITLE: PROCESSOR	
CHECKED:	DATED:	CODE:	SIZE: A3 / DRAWING NO: / REV: 00
CHECKED:	DATED:		
RELEASED: K.S.SHIM	DATED:	SCALE:	SHEET: OF

AVR110/210/310/510/2000/3000/4000/5000 SCHEMATIC DIAGR

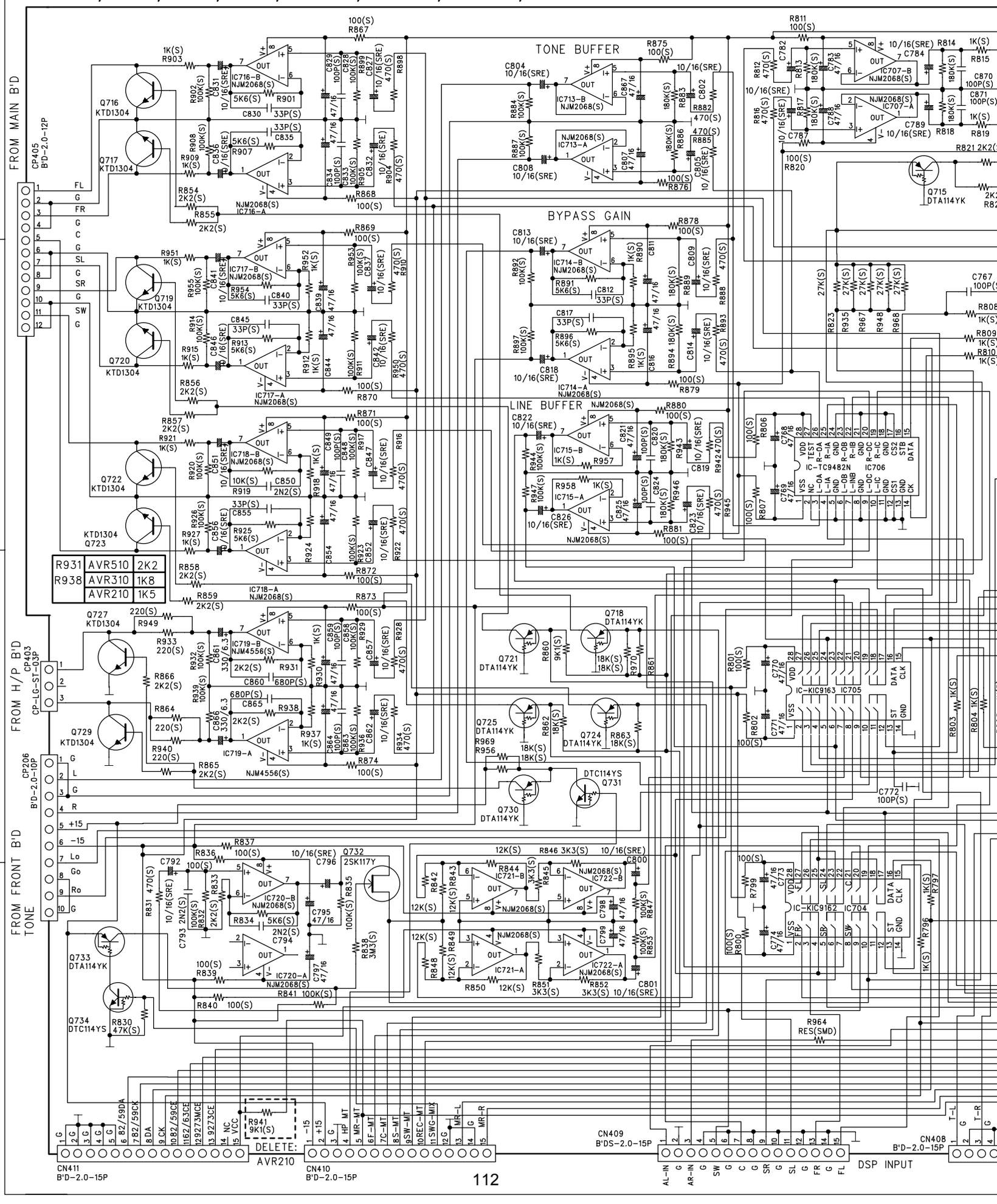

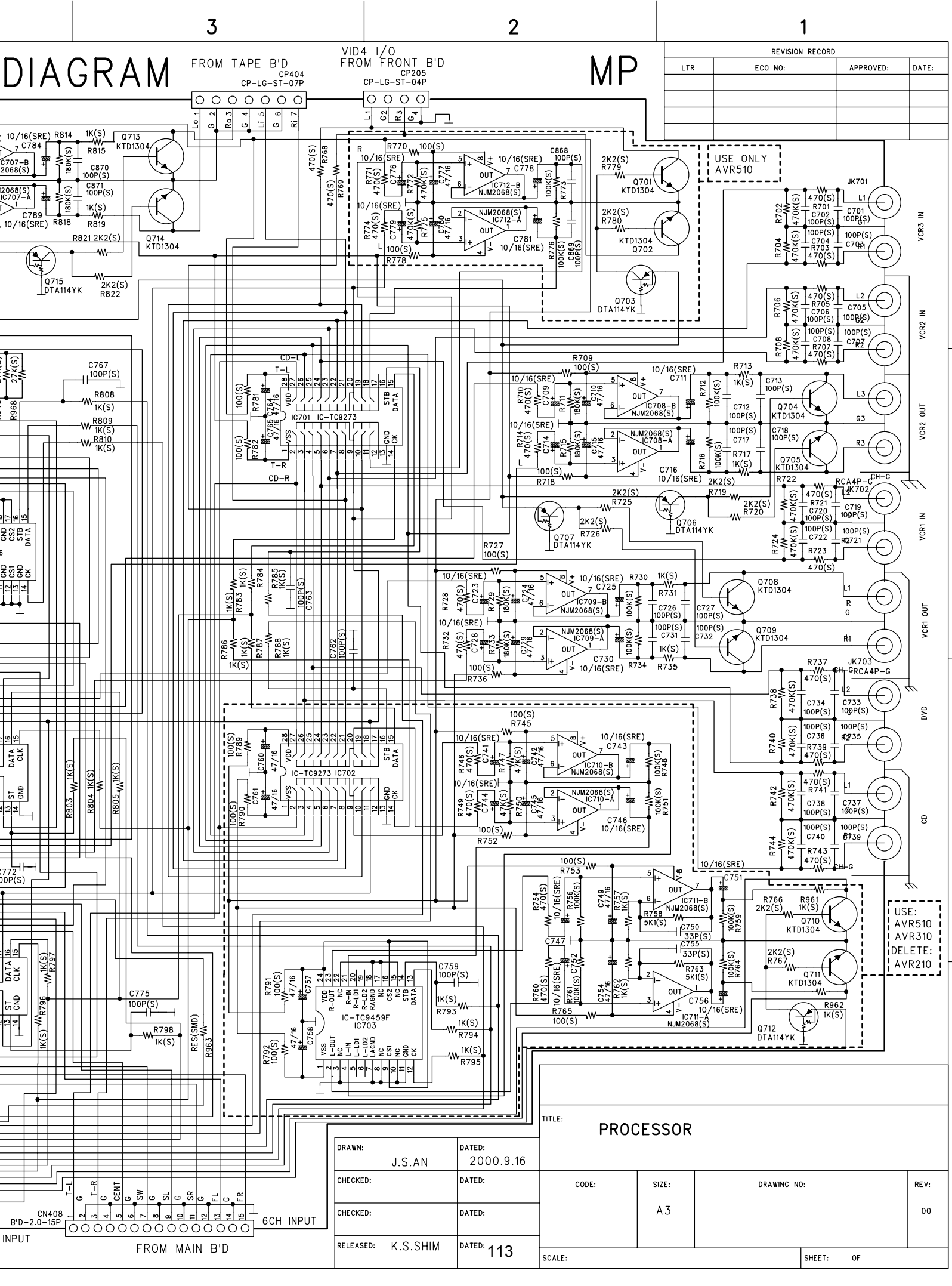

REVISION RECORD			
LTR	ECO NO:	APPROVED:	DATE:

SCHEMATIC DIAGRAM

AVR510 harman/kardon

REVISION RECORD			
LTR	ECO NO:	APPROVED:	DATE:

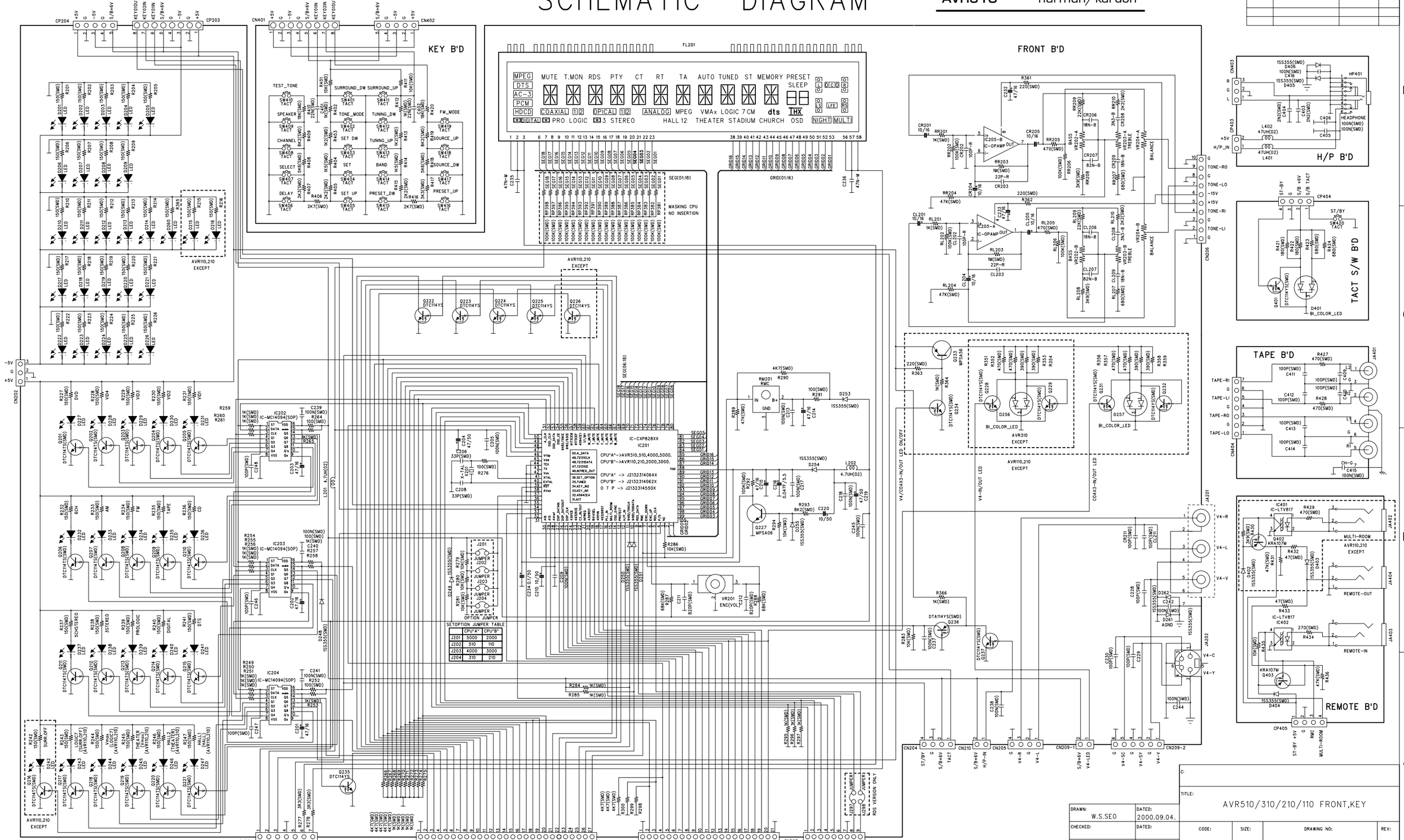

DRAWN: W.S.SEO	DATED: 2000.09.04.
CHECKED:	DATED:
QUALITY CONTROL:	DATED:
RELEASED:	DATED:

TITLE: AVR510/310/210/110 FRONT,KEY

CODE:	SIZE:	DRAWING NO:	REV:

SCALE: SHEET: OF

TTC KOREA LTD.

SCHEMATIC

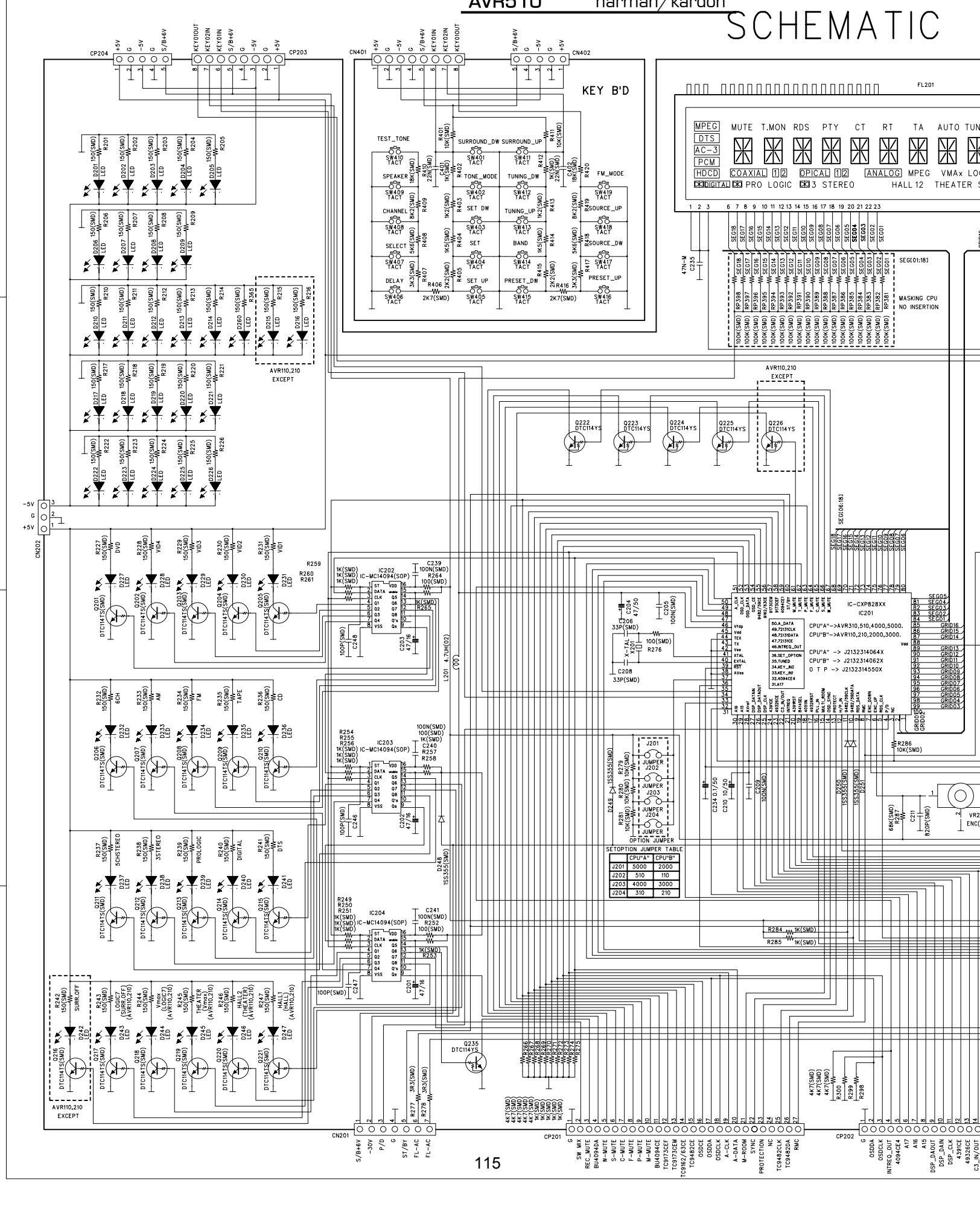
KEY B'D
CP204
CP203
CN401
CN402
FL201
MPEG
DTS
AC-3
PCM
HDCD
MUTE
T.MON
RDS
PTY
CT
RT
TA
AUTO
COAXIAL
OPICAL
ANALOG
PRO LOGIC
3 STEREO
HALL 12
THEATER
TEST_TONE
SURROUND_DW
SURROUND_UP
SPEAKER
TONE_MODE
TUNING_DW
FM_MODE
CHANNEL
SET DW
TUNING_UP
SOURCE_UP
SELECT
SET
BAND
SOURCE_DW
DELAY
SET UP
PRESET_DW
PRESET_UP
MASKING CPU
NO INSERTION
AVR110,210
EXCEPT
IC-CXP828XX
IC201
CPU"A"->AVR310,510,4000,5000.
CPU"B"->AVR110,210,2000,3000.
CPU"A" -> J2132314064X
CPU"B" -> J2132314062X
O T P -> J2132314550X
IC202
IC-MC14094(SOP)
IC203
IC-MC14094(SOP)
IC204
IC-MC14094(SOP)
OPTION JUMPER
SETOPTION JUMPER TABLE
CPU"A" CPU"B"
J201 5000 2000
J202 510 110
J203 4000 3000
J204 310 210
CN202
CN201
CP201
CP202
VR2
ENC

C DIAGRAM

AVR510 harman/kardon

REVISION RECORD			
LTR	ECO NO:	APPROVED:	DATE:

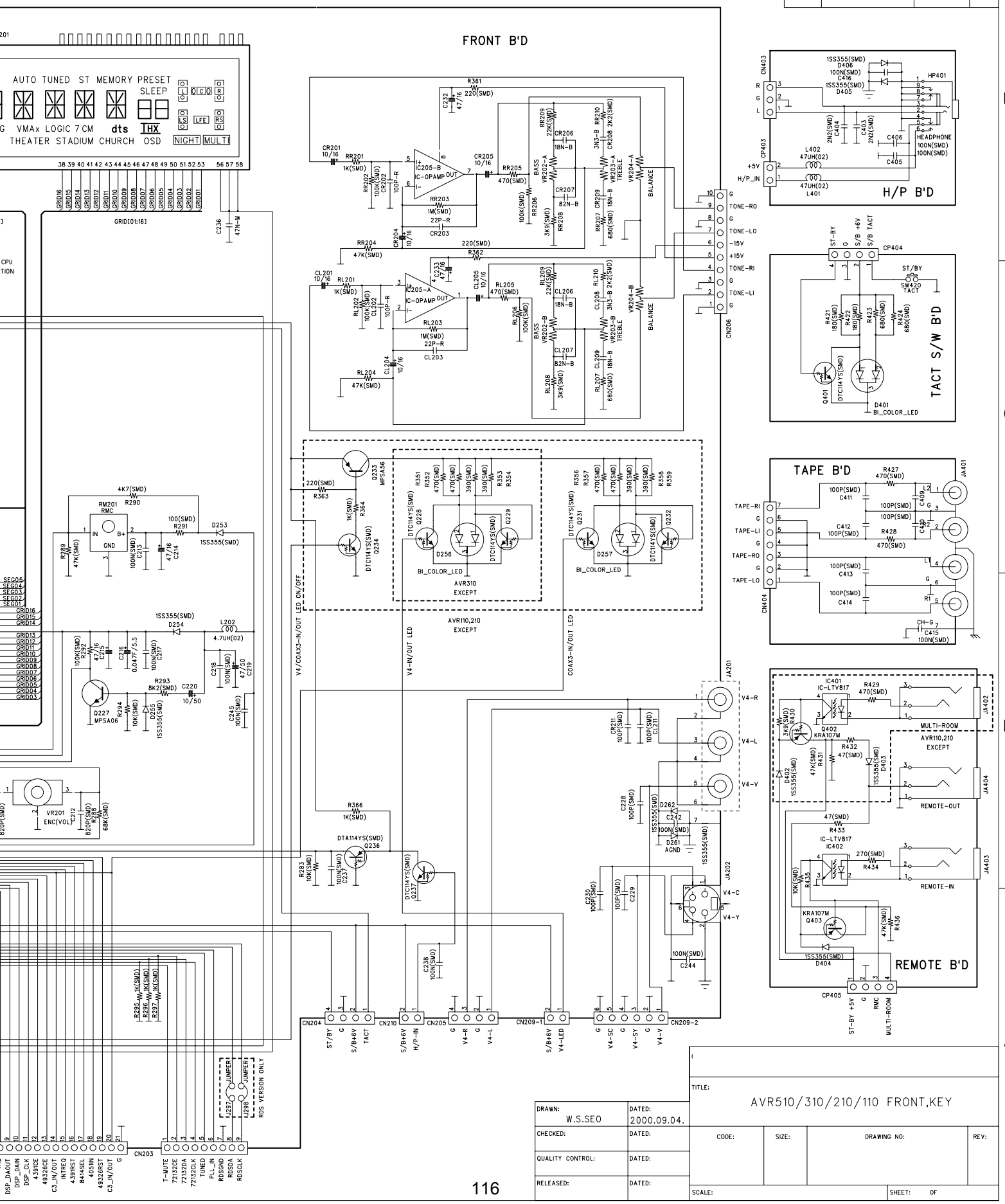

DRAWN: W.S.SEO	DATED: 2000.09.04.	TITLE: AVR510/310/210/110 FRONT,KEY	
CHECKED:	DATED:	CODE: / SIZE: / DRAWING NO:	REV:
QUALITY CONTROL:	DATED:		
RELEASED:	DATED:	SCALE:	SHEET: OF

TTC KOREA LTD.

SCHEMATIC DIAGRAM M.P

AVR 510/ 310/ 210/ 110/ 5000/ 4000/ 3000/ 2000 MAIN AMP

NO	DATE	POS.	CONTENTS	NO	DATE	POS.	CONTENTS

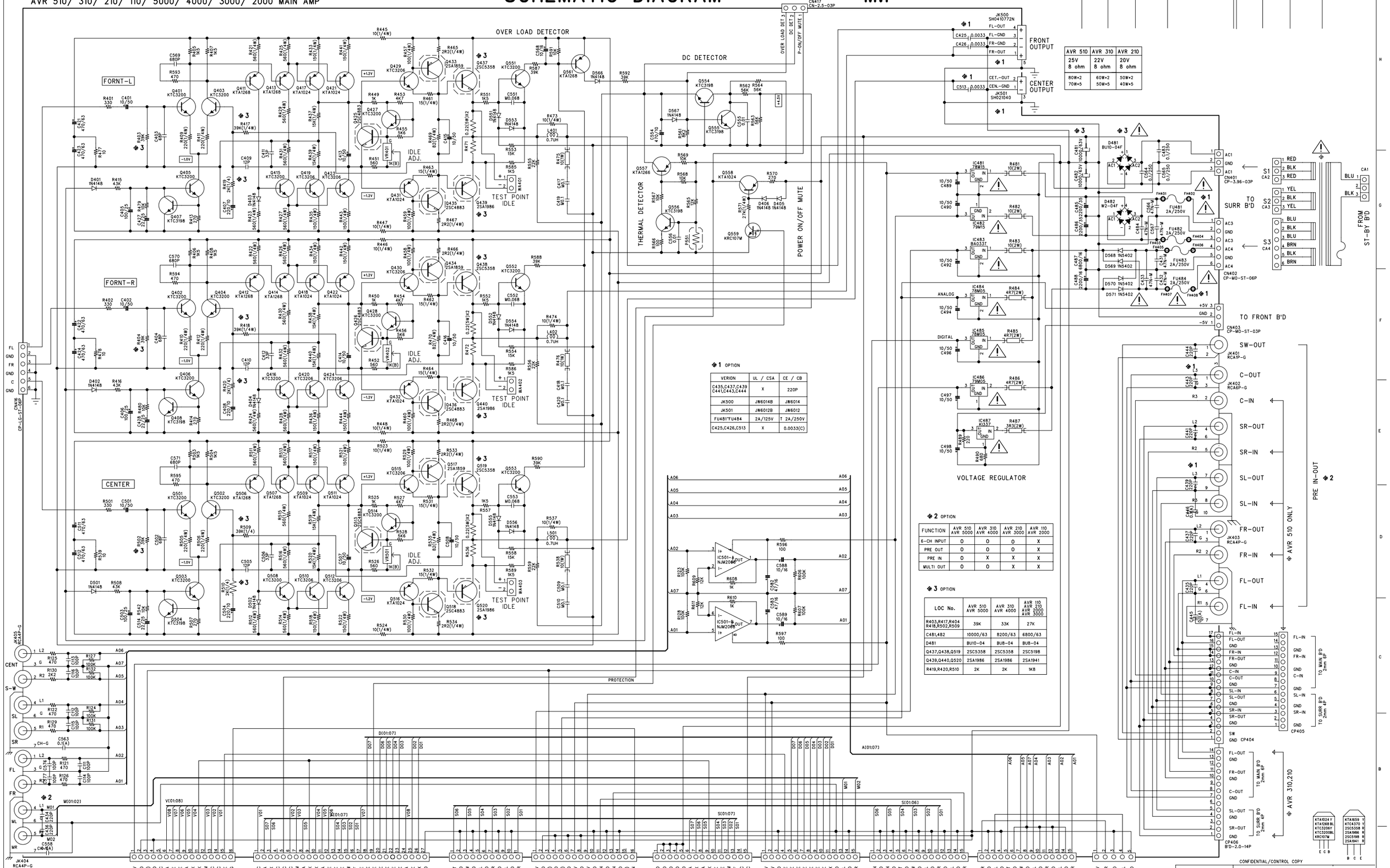

AVR 510	AVR 310	AVR 210
25V 8 ohm	22V 8 ohm	20V 8 ohm
80W+2 70W+5	60W+2 50W+5	50W+2 40W+5

❖1 OPTION

VERION	UL / CSA	CE / CB
C435,C437,C439 C441,C443,C444	X	220P
JK500	JW6014B	JW6014
JK501	JW6012B	JW6012
FU481~FU484	2A/125V	T 2A/250V
C425,C426,C513	X	0.0033(C)

❖2 OPTION

FUNCTION	AVR 510 AVR 5000	AVR 310 AVR 4000	AVR 210 AVR 3000	AVR 110 AVR 2000
6-CH INPUT	O	O	O	X
PRE OUT	O	O	O	X
PRE IN	O	X	X	X
MULTI OUT	O	O	X	X

❖3 OPTION

LOC No.	AVR 510 AVR 5000	AVR 310 AVR 4000	AVR 110 AVR 210 AVR 2000 AVR 3000
R403,R417,R404 R418,R502,R509	39K	33K	27K
C481,482	10000/63	8200/63	6800/63
D481	BU10-04	BU8-04	BU8-04
Q437,Q438,Q519	2SC5358	2SC5358	2SC5198
Q439,Q440,Q520	2SA1986	2SA1986	2SA1941
R419,R420,R510	2K	2K	1K8

SCHEMATIC DIAGRAM

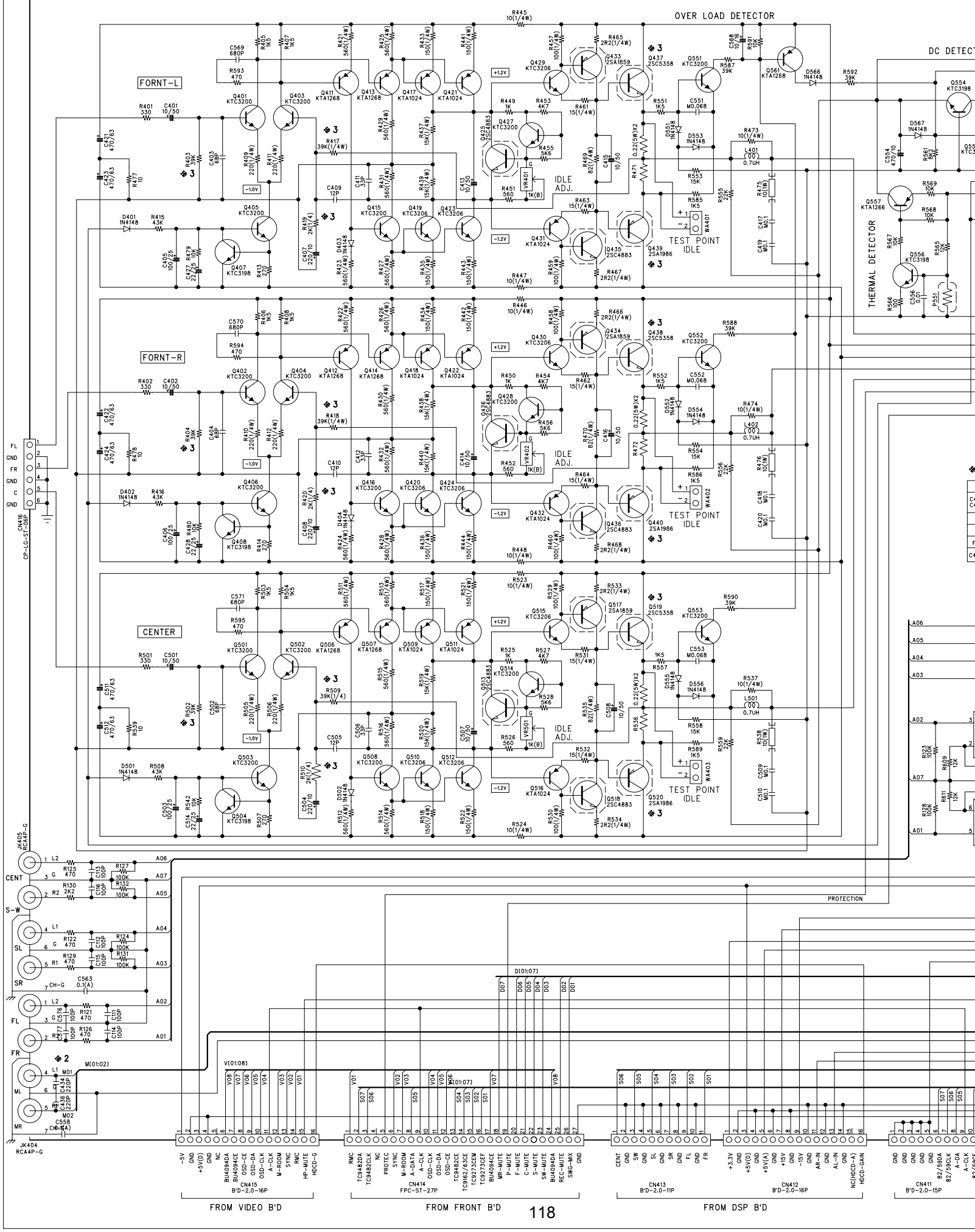

DIAGRAM M.P

NO	DATE	POS.	CONTENTS	NO	DATE	POS.	CONTENTS

AVR510 harman/kardon

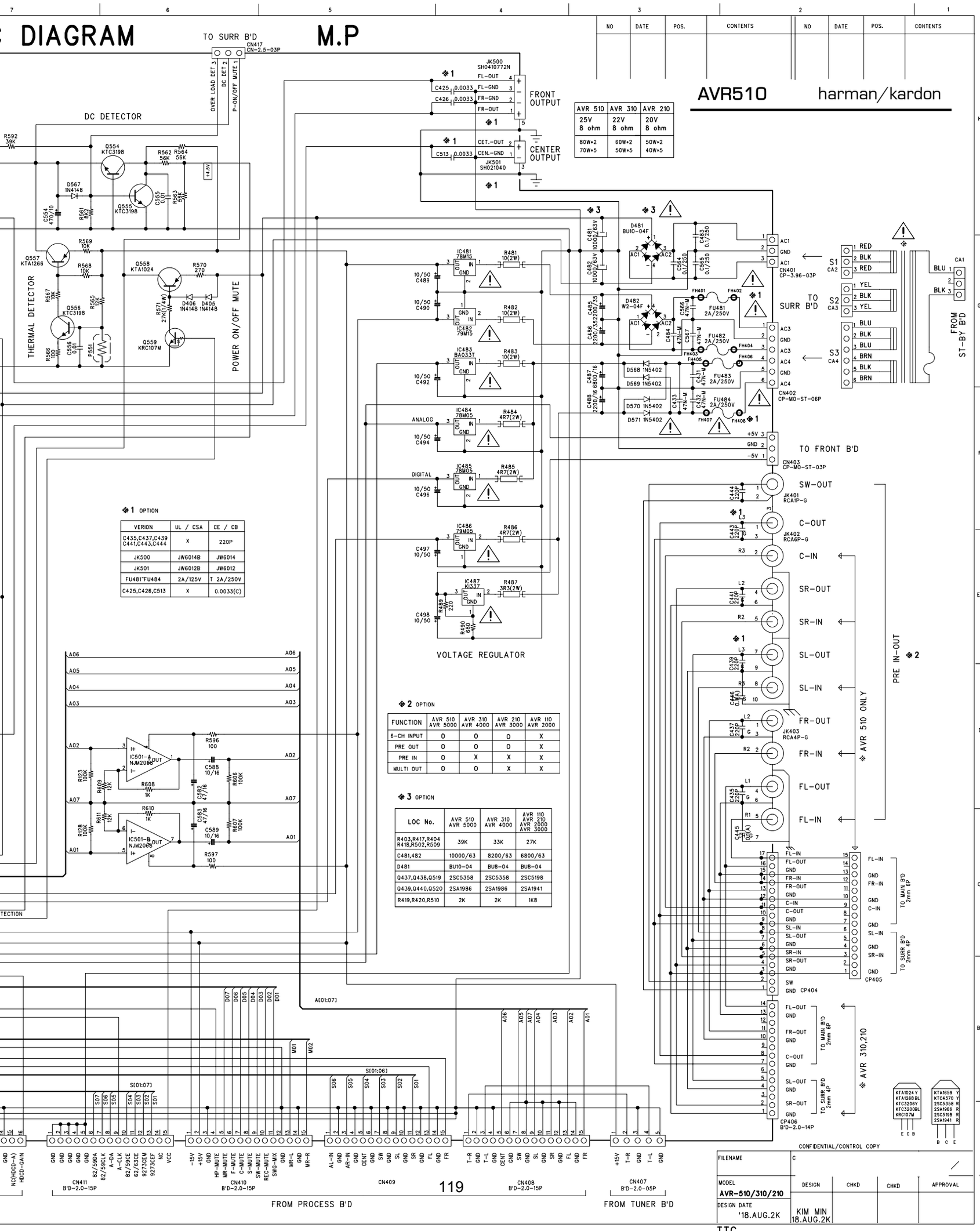

AVR 510	AVR 310	AVR 210
25V 8 ohm	22V 8 ohm	20V 8 ohm
80W*2 70W*5	60W*2 50W*5	50W*2 40W*5

❖1 OPTION

VERION	UL / CSA	CE / CB
C435,C437,C439 C441,C443,C444	X	220P
JK500	JW6014B	JW6014
JK501	JW6012B	JW6012
FU481~FU484	2A/125V	T 2A/250V
C425,C426,C513	X	0.0033(C)

❖2 OPTION

FUNCTION	AVR 510 AVR 5000	AVR 310 AVR 4000	AVR 210 AVR 3000	AVR 110 AVR 2000
6-CH INPUT	O	O	O	X
PRE OUT	O	O	O	X
PRE IN	O	X	X	X
MULTI OUT	O	O	X	X

❖3 OPTION

LOC No.	AVR 510 AVR 5000	AVR 310 AVR 4000	AVR 110 AVR 210 AVR 2000 AVR 3000
R403,R417,R404 R418,R502,R509	39K	33K	27K
C481,482	10000/63	8200/63	6800/63
D481	BU10-04	BU8-04	BU8-04
Q437,Q438,Q519	2SC5358	2SC5358	2SC5198
Q439,Q440,Q520	2SA1986	2SA1986	2SA1941
R419,R420,R510	2K	2K	1K8

CONFIDENTIAL/CONTROL COPY

FILENAME	C			
MODEL AVR-510/310/210	DESIGN	CHKD	CHKD	APPROVAL
DESIGN DATE '18.AUG.2K	KIM MIN 18.AUG.2K			

TTC

SCHEMATIC DIAGRAM MP AVR110/210/310/510 DSP B'D

REVISION RECORD			
LTR	ECO NO:	APPROVED:	DATE:

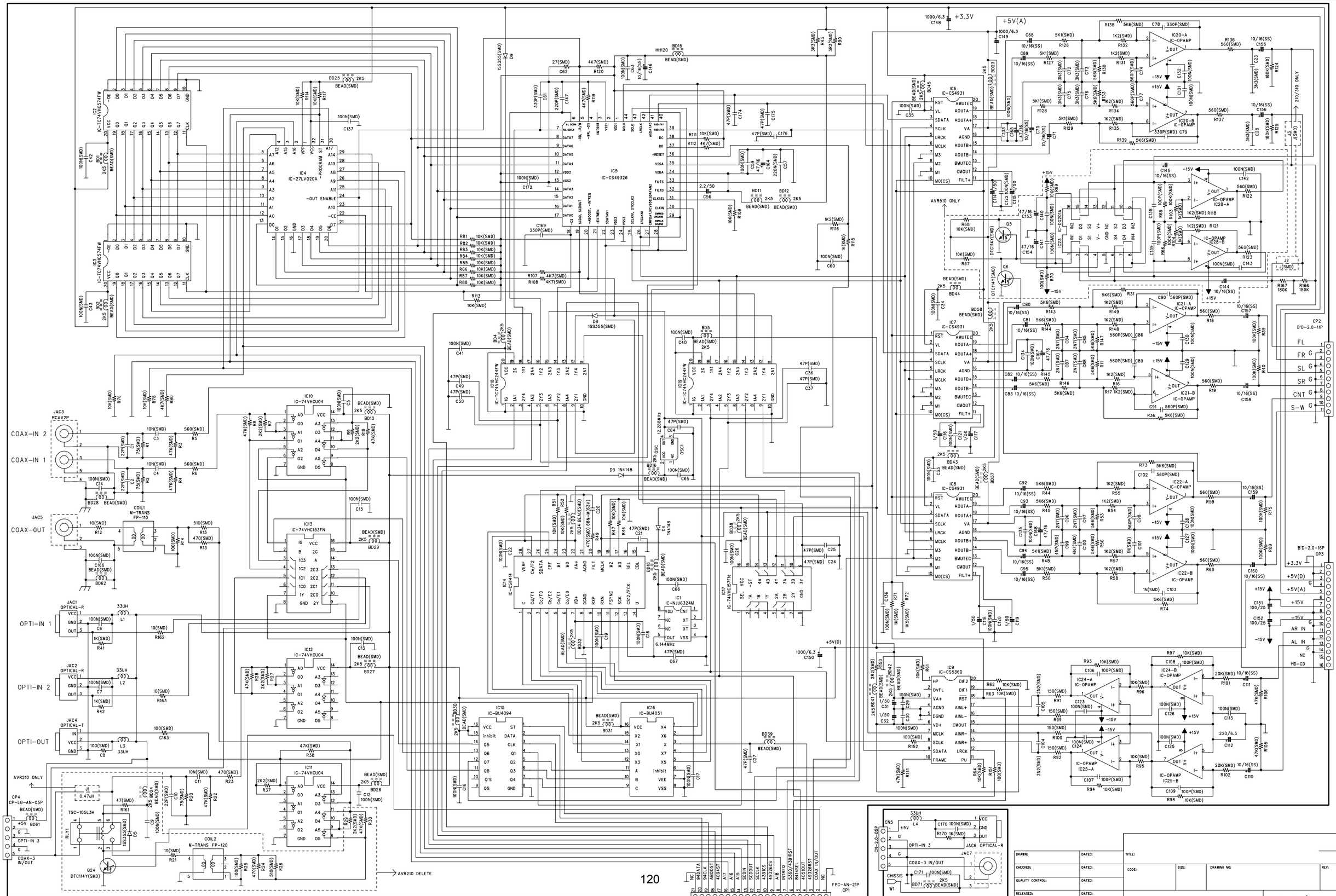

DRAWN:	DATED:	TITLE:	
CHECKED:	DATED:	CODE:	SIZE: / DRAWING NO: / REV:
QUALITY CONTROL:	DATED:		
RELEASED:	DATED:	SCALE:	SHEET: 1 OF 1

SCHEMATIC DIAGRAM

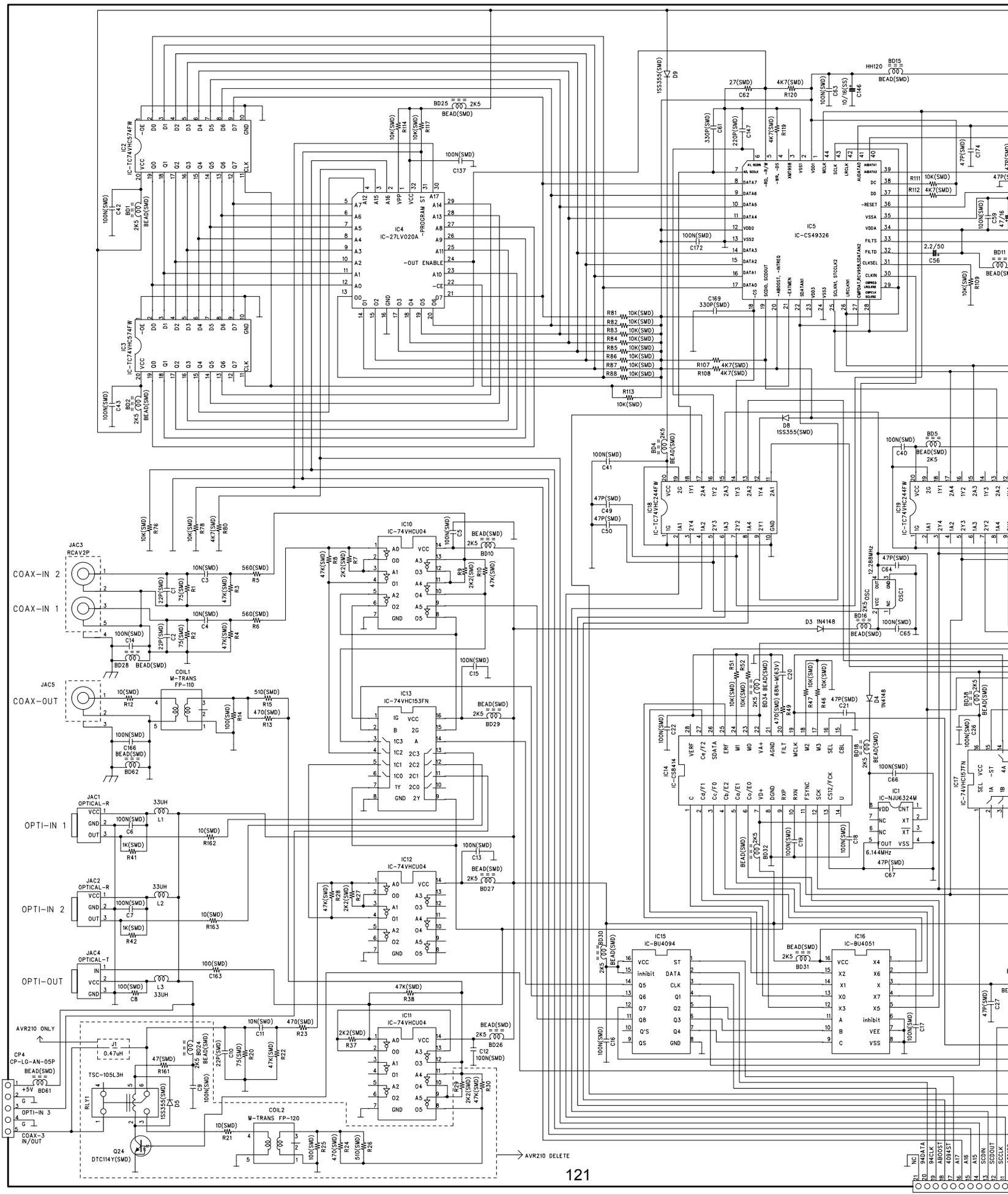

IAGRAM MP AVR110/210/310/510 DSP B'D

REVISION RECORD			
LTR	ECO NO:	APPROVED:	DATE:

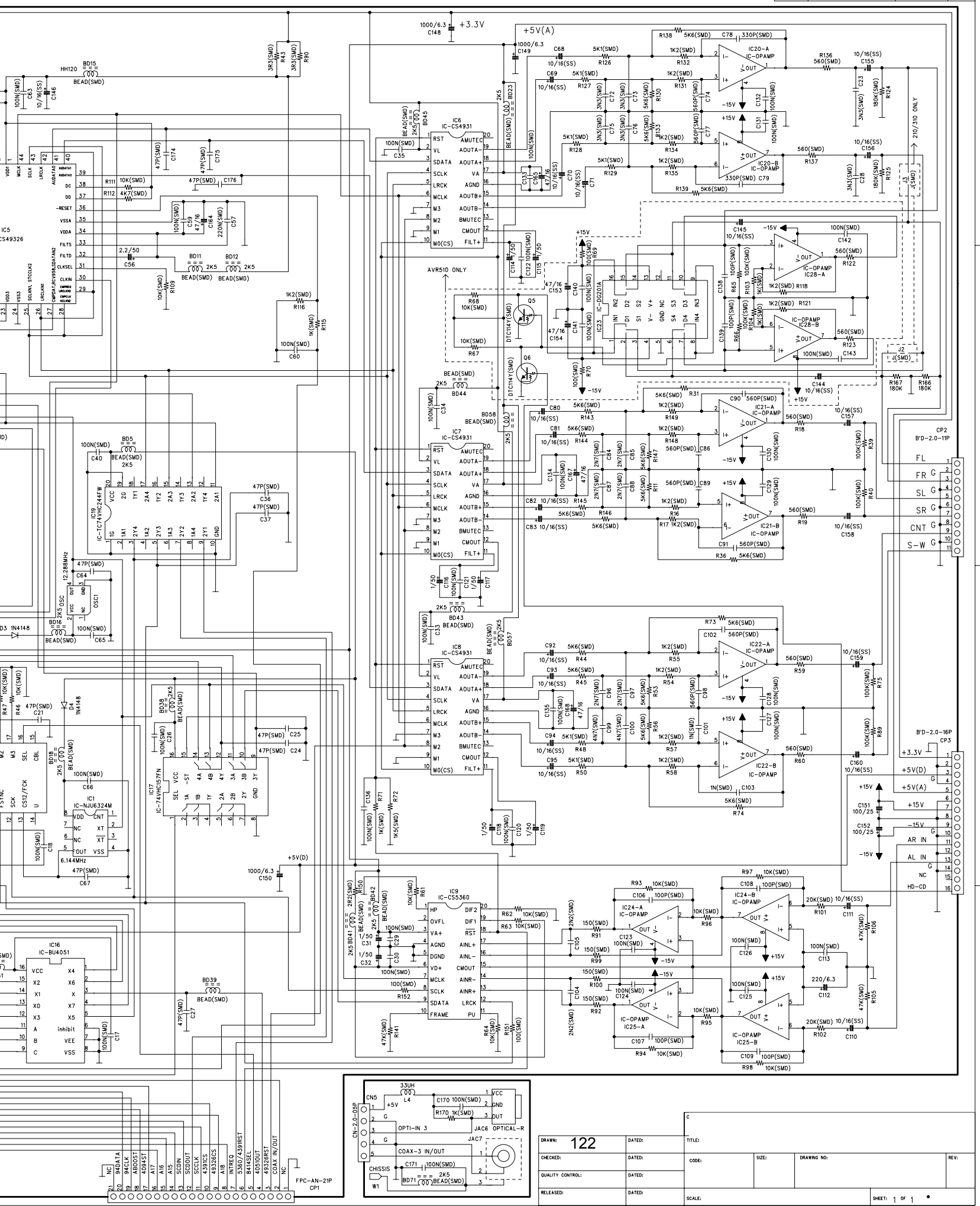

DRAWN: 122	DATED:	TITLE:	
CHECKED:	DATED:	CODE:	SIZE: DRAWING NO: REV:
QUALITY CONTROL:	DATED:		
RELEASED:	DATED:	SCALE:	SHEET: 1 OF 1

SURROUND AMP SCHEMATIC DIAGR

REAR AMP ASS'Y

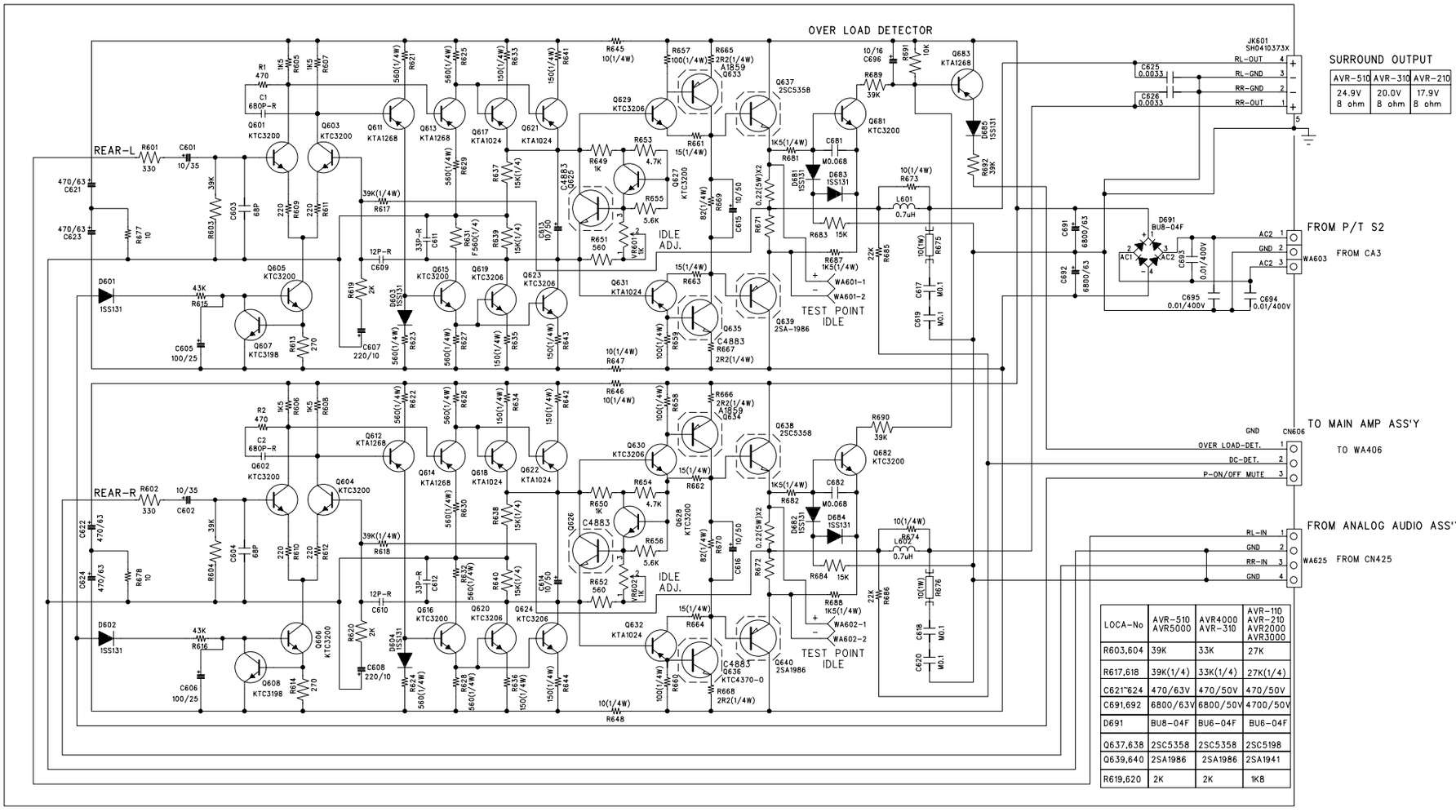

SURROUND OUTPUT		
AVR-510	AVR-310	AVR-210
24.9V 8 ohm	20.0V 8 ohm	17.9V 8 ohm

LOCA-No	AVR-510 AVR5000	AVR4000 AVR-310	AVR-110 AVR-210 AVR2000 AVR3000
R603,604	39K	33K	27K
R617,618	39K(1/4)	33K(1/4)	27K(1/4)
C621~624	470/63V	470/50V	470/50V
C691,692	6800/63V	6800/50V	4700/50V
D691	BU8-04F	BU6-04F	BU6-04F
Q637,638	2SC5358	2SC5358	2SC5198
Q639,640	2SA1986	2SA1986	2SA1941
R619,620	2K	2K	1K8

SUB POWER SUPPLY ASS'Y

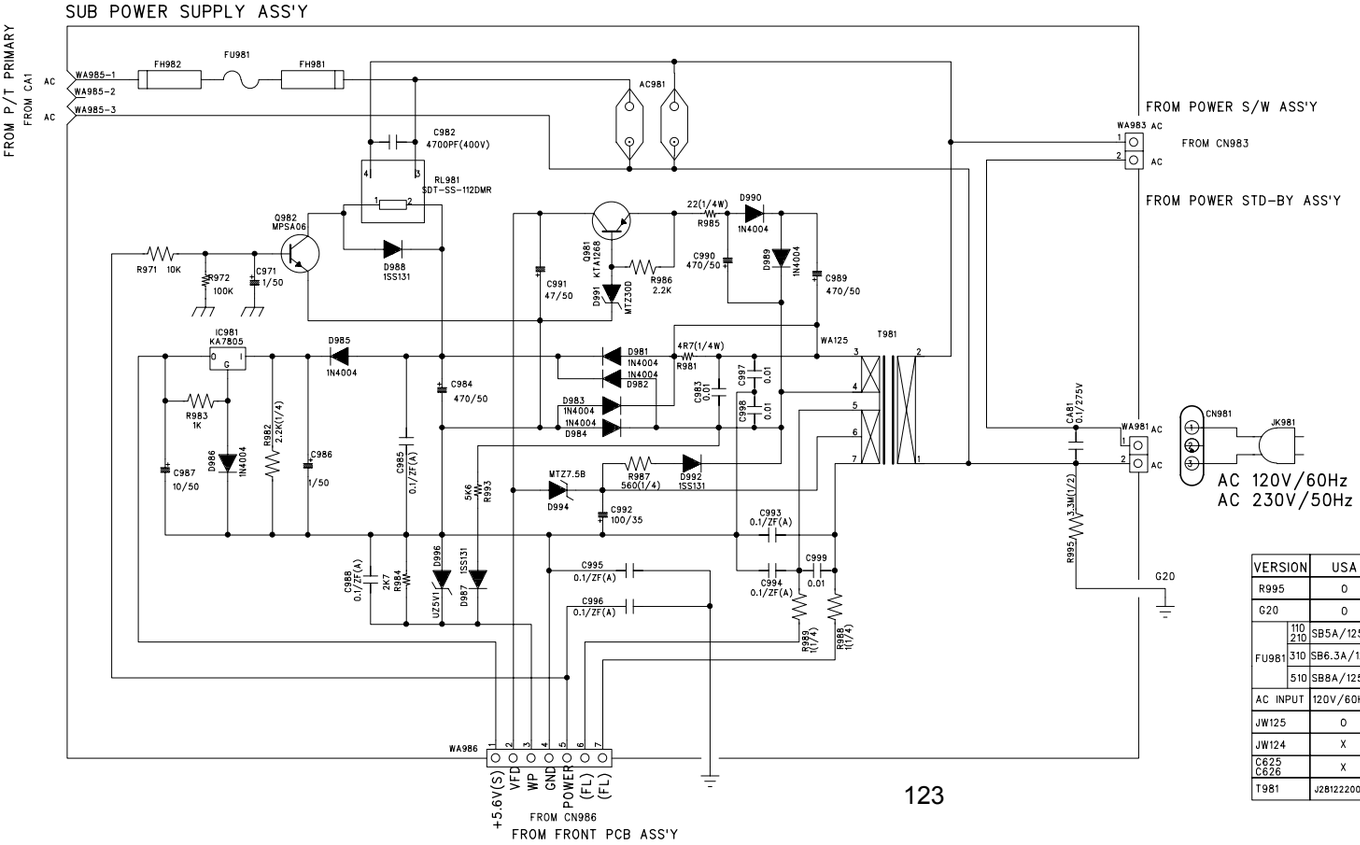

VERSION		USA	EU
R995		0	X
G20		0	X
FU981	110 210	SB5A/125V	T3.15A/250V
	310	SB6.3A/125V	T4A/250V
	510	SB8A/125V	T5A/250V
AC INPUT		120V/60Hz	230V/50Hz
JW125		0	X
JW124		X	0
C625 C626		X	0
T981		J2812220012X	J2812420032X

COMPONENT B`D ASS'Y

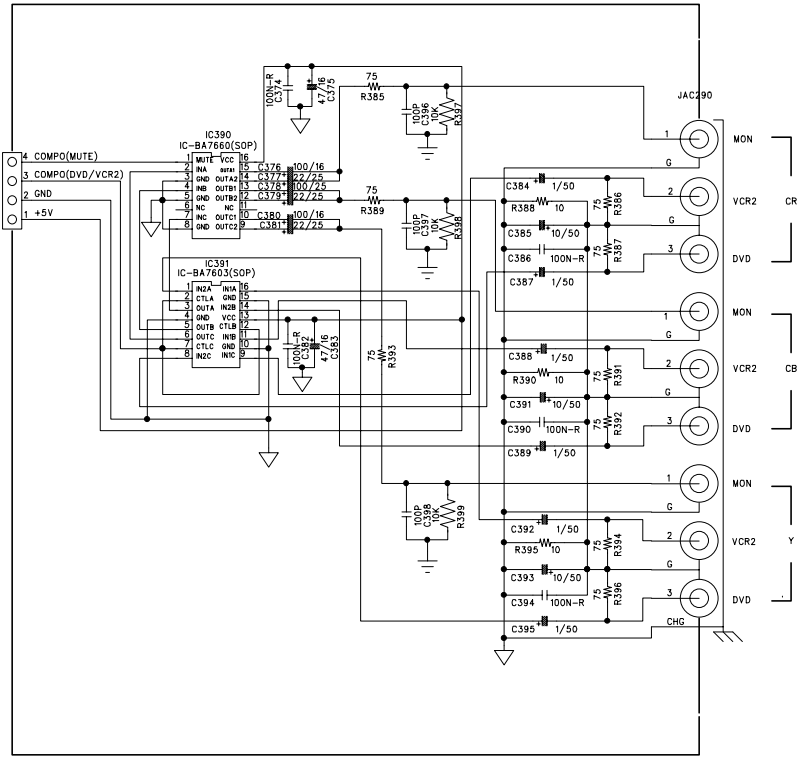

SCHEMATIC DIAGRAM

NO	DATE	POS.	CONTENTS	NO	DATE	POS.	CONTENTS

M.P

AVR210/310/510

AVR3000/4000/5000

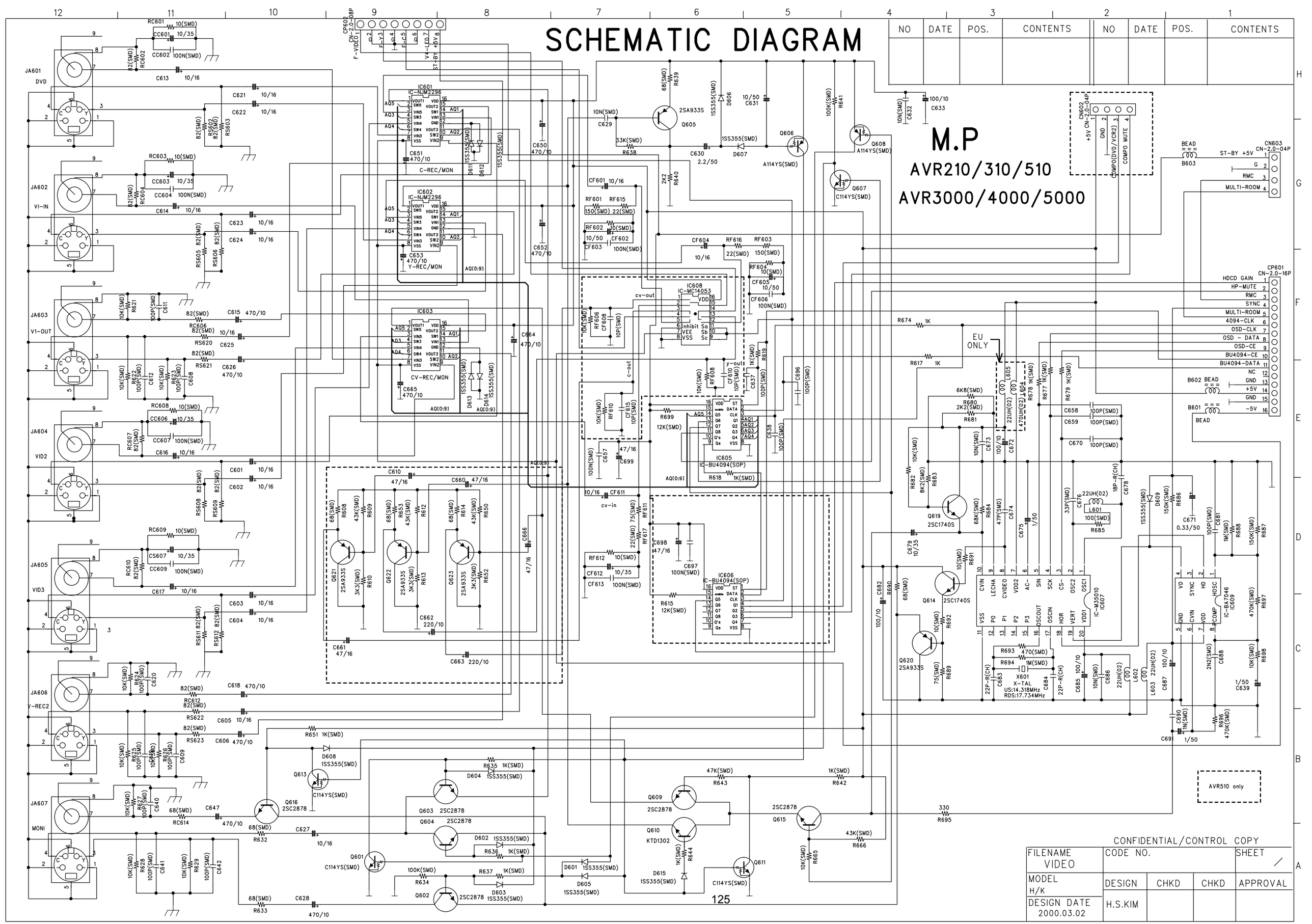

FILENAME VIDEO	CODE NO.			SHEET /
MODEL H/K	DESIGN	CHKD	CHKD	APPROVAL
DESIGN DATE 2000.03.02	H.S.KIM			

CONFIDENTIAL/CONTROL COPY

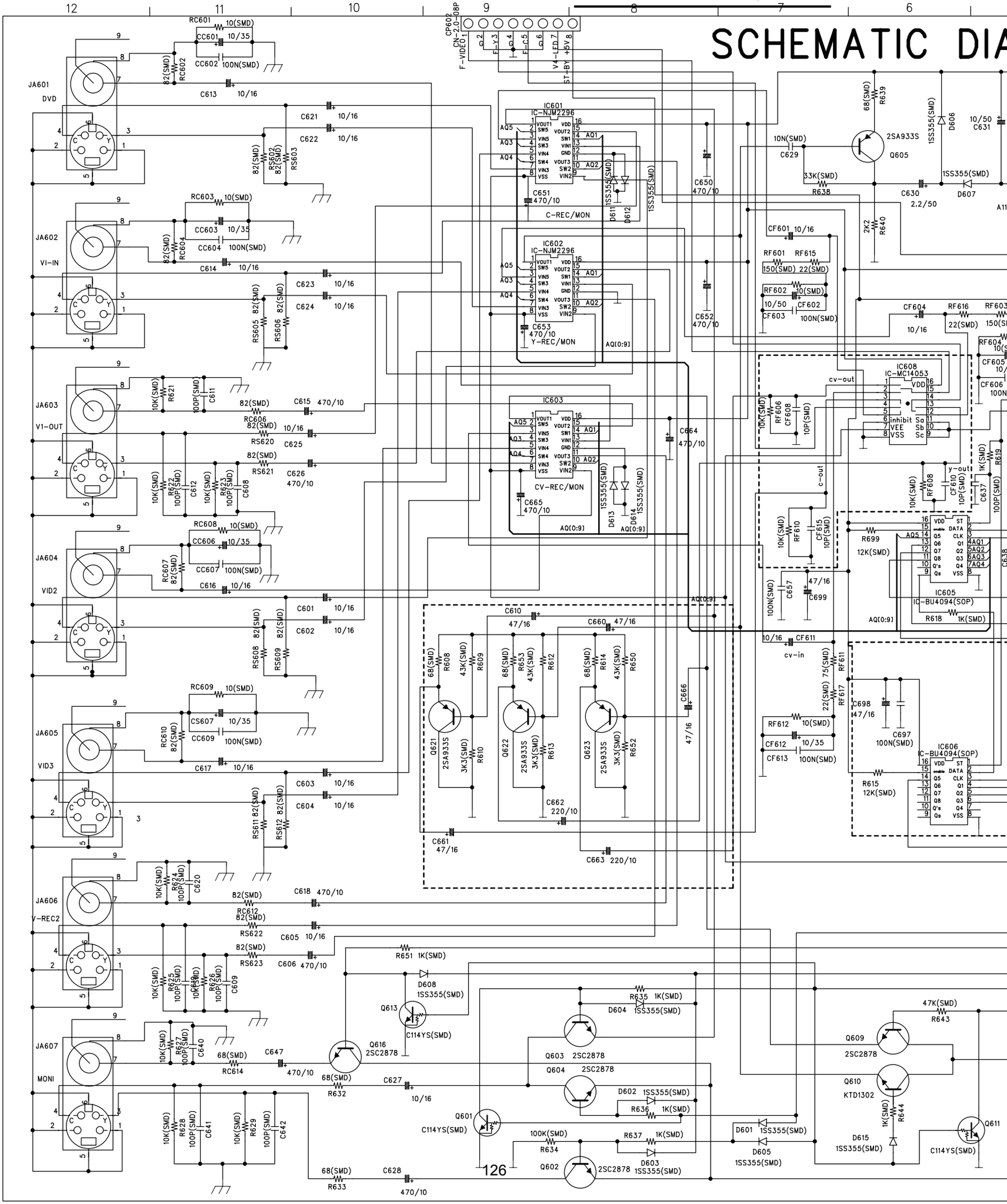
SCHEMATIC DIA
JA601 DVD
JA602 VI-IN
JA603 V1-OUT
JA604 VID2
JA605 VID3
JA606 V-REC2
JA607 MONI
CP602 CN-2.0-08P
F-VIDEO
F-Y
F-C
V4-LED
ST-BY
+5V
IC601 IC-NJM2296
C-REC/MON
IC602 IC-NJM2296
Y-REC/MON
IC603
CV-REC/MON
IC608 IC-MC14053
IC605 IC-BU4094(SOP)
IC606 IC-BU4094(SOP)
cv-out
y-out
c-out
cv-in
AQ[0:9]
Q605 2SA933S
Q621 2SA933S
Q622 2SA933S
Q623 2SA933S
Q603 2SC2878
Q604 2SC2878
Q616 2SC2878
Q609 2SC2878
Q610 KTD1302
Q601 C114YS(SMD)
Q611 C114YS(SMD)
Q613 C114YS(SMD)
Q602 2SC2878

MATIC DIAGRAM

NO	DATE	POS.	CONTENTS	NO	DATE	POS.	CONTENTS

M.P

AVR210/310/510

AVR3000/4000/5000

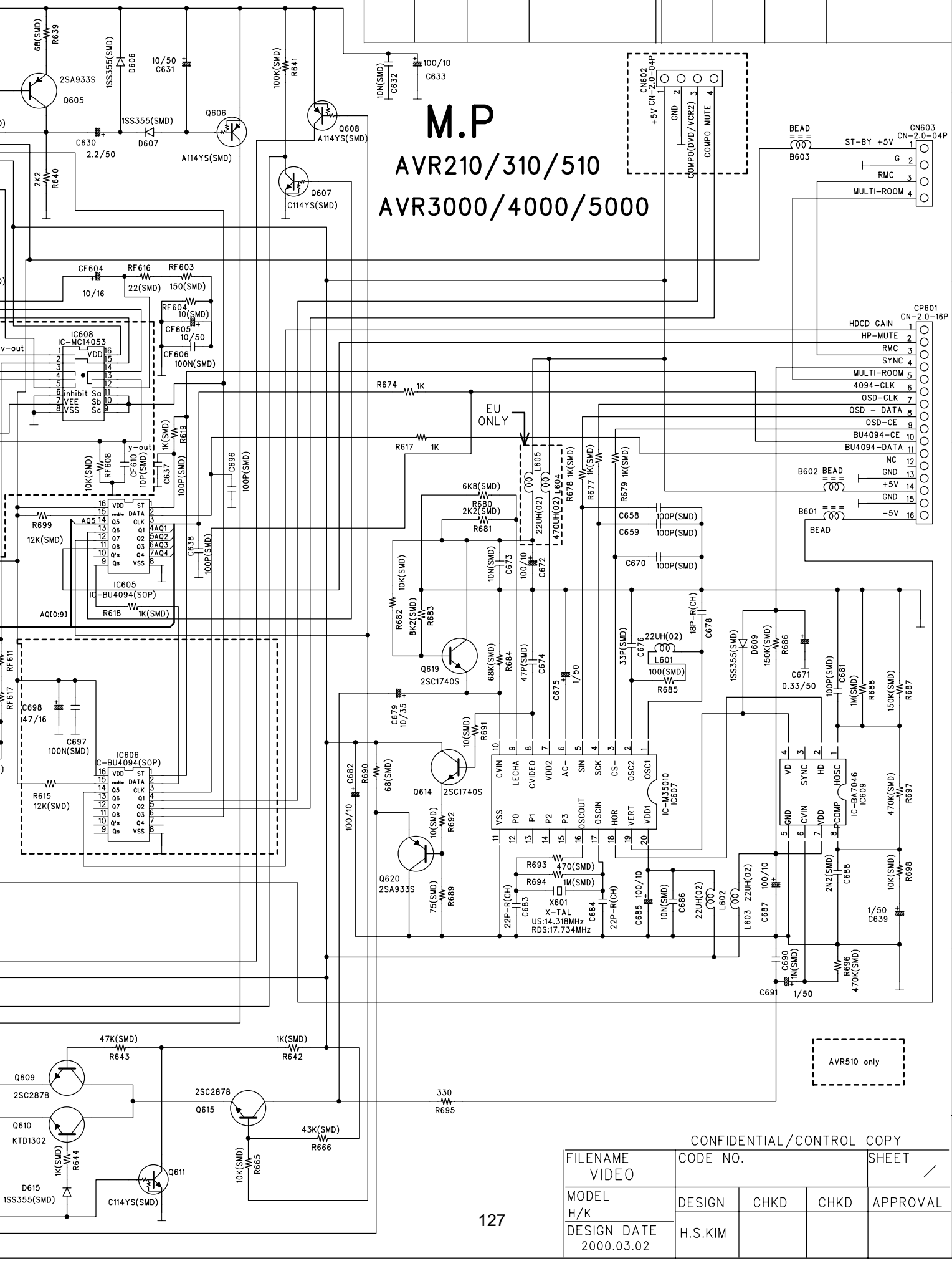

CONFIDENTIAL/CONTROL COPY

FILENAME VIDEO	CODE NO.			SHEET /
MODEL H/K	DESIGN	CHKD	CHKD	APPROVAL
DESIGN DATE 2000.03.02	H.S.KIM			

AVR510 Tuner PCB is shown as reference only as it is only available as complete PCB

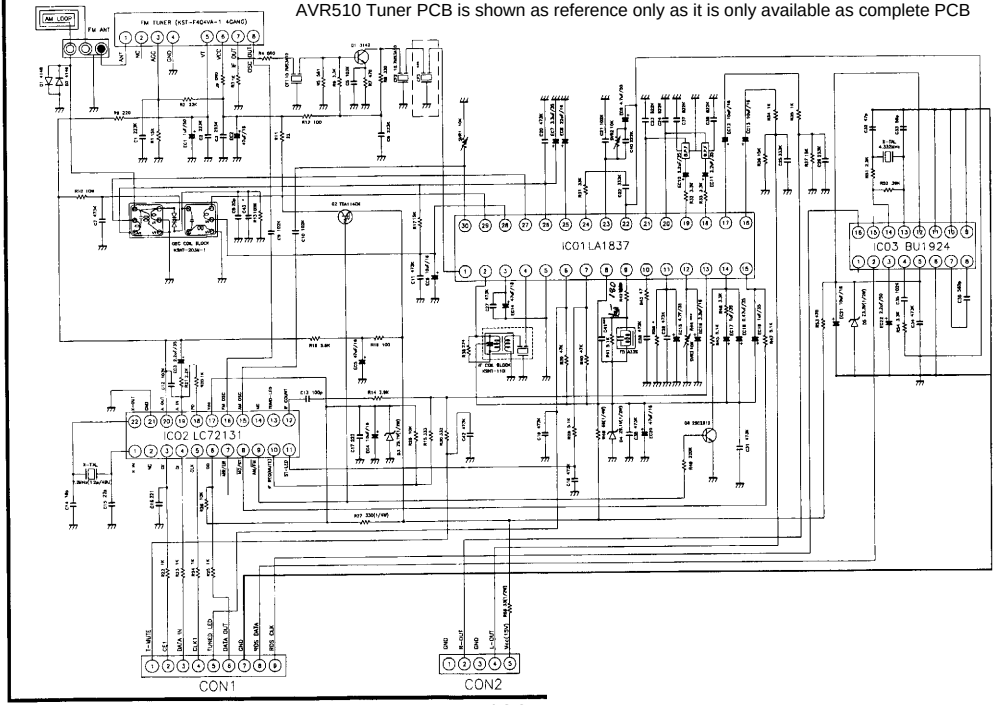

WIRING DIAGRAM

MODEL:AVR110/210/310/510
AVR2000/3000/4000/5000

REVISION RECORD			
LTR	ECO NO:	APPROVED:	DATE:

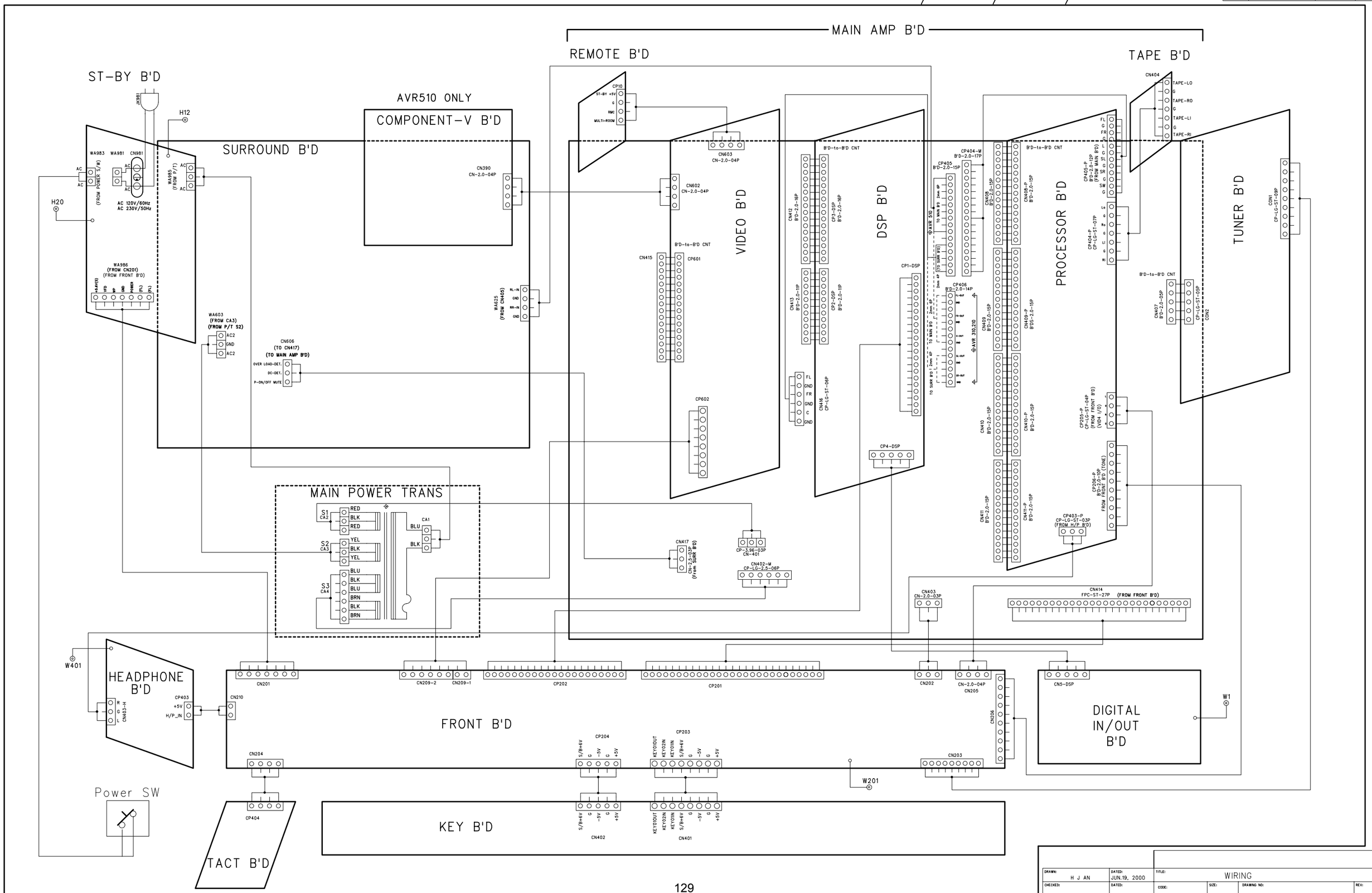

DRAWN: H J AN	DATED: JUN.19, 2000	TITLE: WIRING	
CHECKED:	DATED:	CODE:	SIZE: / DRAWING NO: / REV:
QUALITY CONTROL:	DATED:		
RELEASED:	DATED:	SCALE:	SHEET: 1 OF 1

WIRING DIAGRAM

MODE

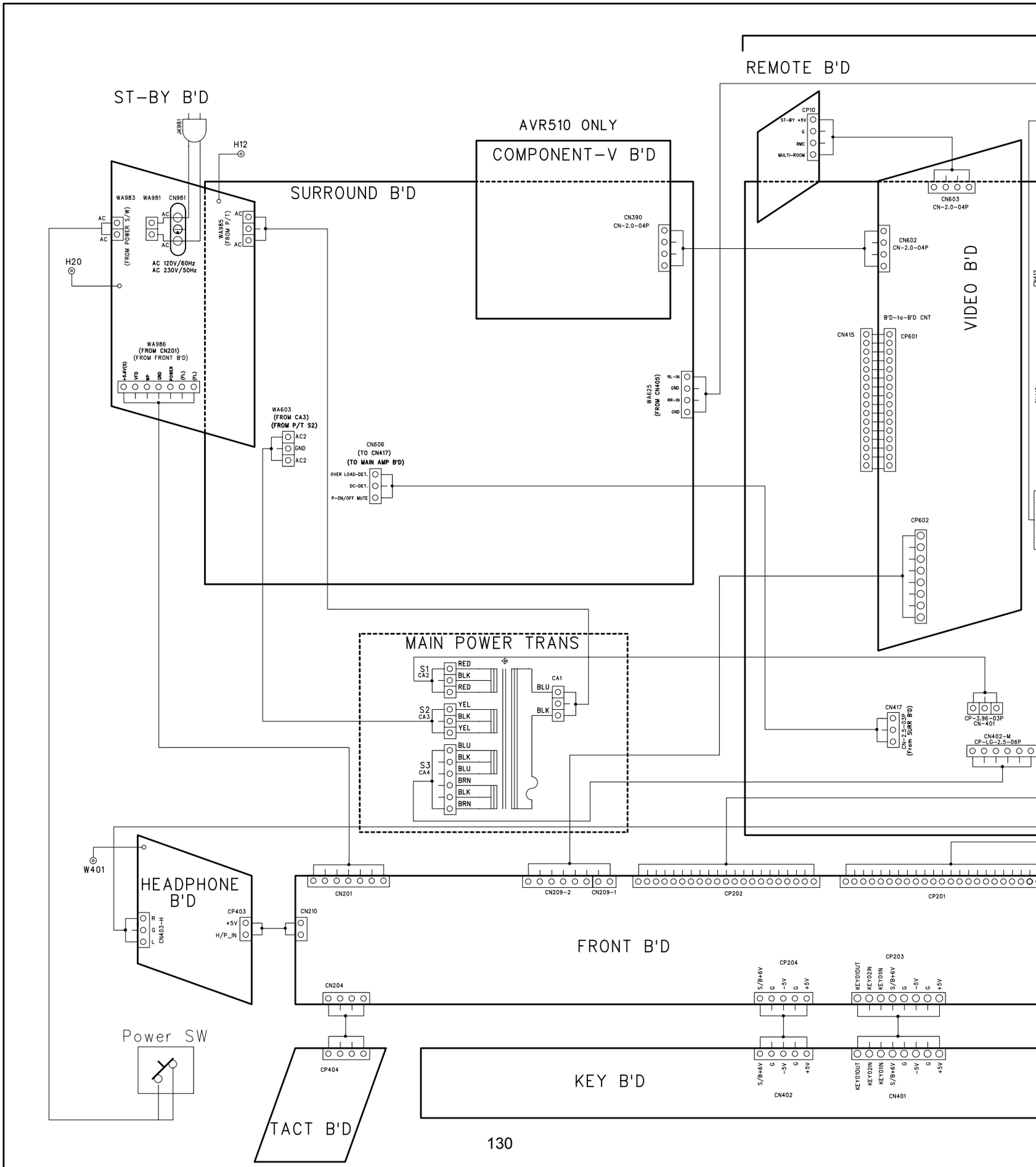

MODEL:AVR110/210/310/510
AVR2000/3000/4000/5000

REVISION RECORD			
LTR	ECO NO:	APPROVED:	DATE:

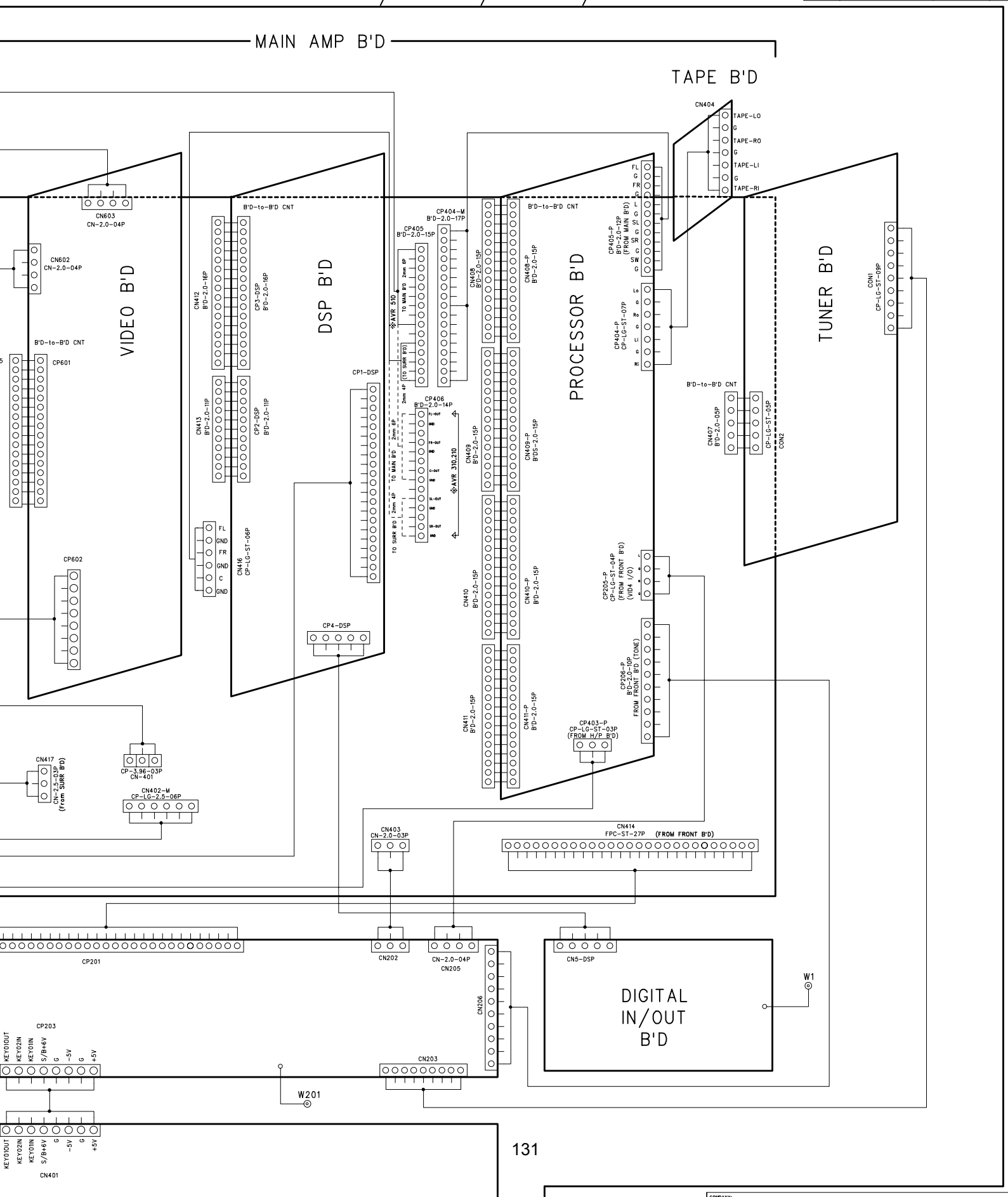

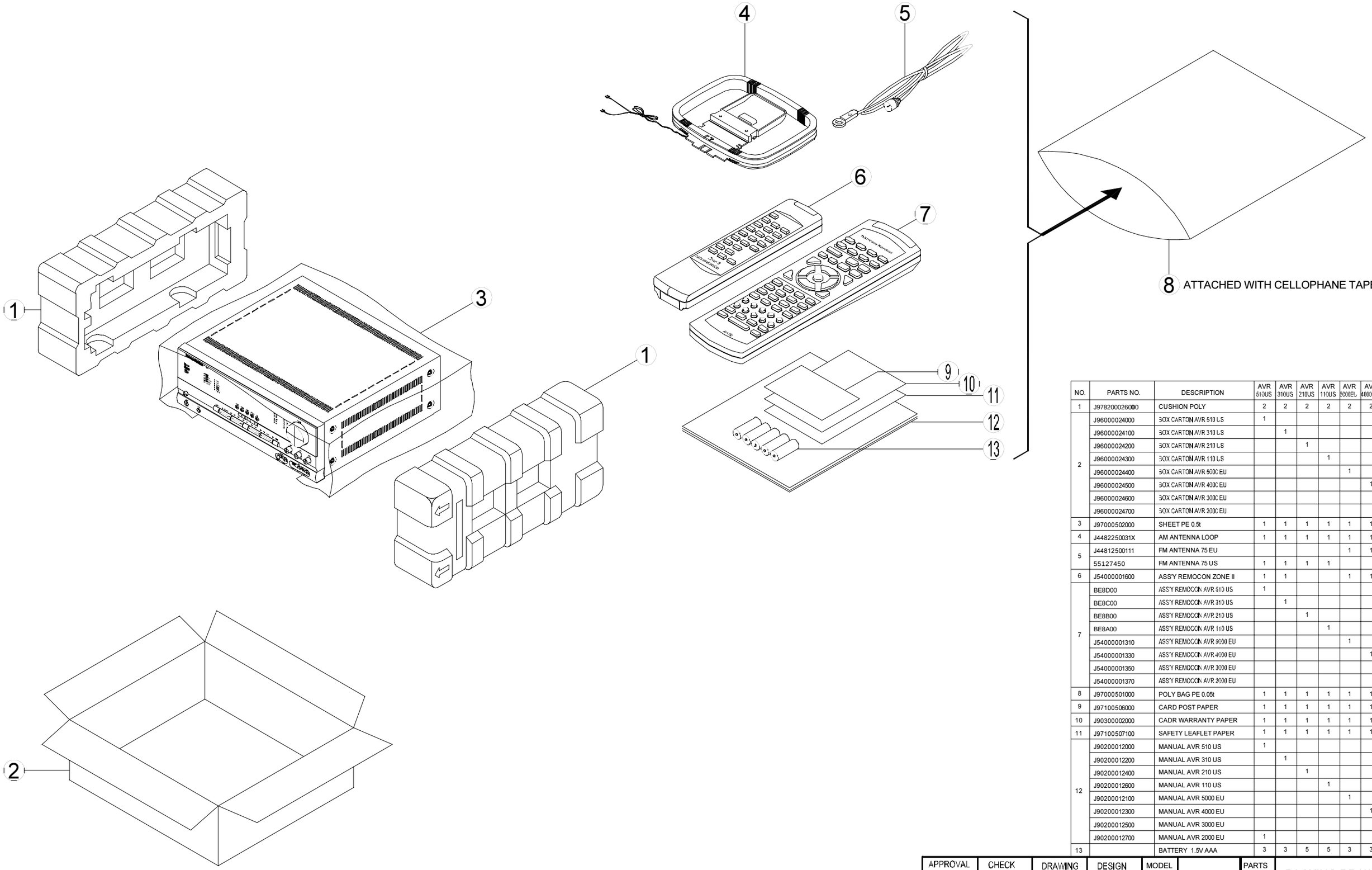

NO.	PARTS NO.	DESCRIPTION	AVR 510US	AVR 310US	AVR 210US	AVR 110US	AVR 5000EU	AVR 4000EU	AVR 3000EU	AVR 2000EU
1	J978200026000	CUSHION POLY	2	2	2	2	2	2	2	2
2	J96000024000	BOX CARTON AVR 510 US	1							
	J96000024100	BOX CARTON AVR 310 US		1						
	J96000024200	BOX CARTON AVR 210 US			1					
	J96000024300	BOX CARTON AVR 110 US				1				
	J96000024400	BOX CARTON AVR 5000 EU					1			
	J96000024500	BOX CARTON AVR 4000 EU						1		
	J96000024600	BOX CARTON AVR 3000 EU							1	
	J96000024700	BOX CARTON AVR 2000 EU								1
3	J97000502000	SHEET PE 0.5t	1	1	1	1	1	1	1	1
4	J4482250031X	AM ANTENNA LOOP	1	1	1	1	1	1	1	1
5	J44812500111	FM ANTENNA 75 EU					1	1	1	1
	55127450	FM ANTENNA 75 US	1	1	1	1				
6	J54000001600	ASS'Y REMOCON ZONE II	1	1			1	1		
7	BE8D00	ASS'Y REMOCON AVR 510 US	1							
	BE8C00	ASS'Y REMOCON AVR 310 US		1						
	BE8B00	ASS'Y REMOCON AVR 210 US			1					
	BE8A00	ASS'Y REMOCON AVR 110 US				1				
	J54000001310	ASS'Y REMOCON AVR 5000 EU					1			
	J54000001330	ASS'Y REMOCON AVR 4000 EU						1		
	J54000001350	ASS'Y REMOCON AVR 3000 EU							1	
	J54000001370	ASS'Y REMOCON AVR 2000 EU								1
8	J97000501000	POLY BAG PE 0.05t	1	1	1	1	1	1	1	1
9	J97100506000	CARD POST PAPER	1	1	1	1	1	1	1	1
10	J90300002000	CADR WARRANTY PAPER	1	1	1	1	1	1	1	1
11	J97100507100	SAFETY LEAFLET PAPER	1	1	1	1	1	1	1	1
12	J90200012000	MANUAL AVR 510 US	1							
	J90200012200	MANUAL AVR 310 US		1						
	J90200012400	MANUAL AVR 210 US			1					
	J90200012600	MANUAL AVR 110 US				1				
	J90200012100	MANUAL AVR 5000 EU					1			
	J90200012300	MANUAL AVR 4000 EU						1		
	J90200012500	MANUAL AVR 3000 EU							1	
	J90200012700	MANUAL AVR 2000 EU	1							1
13		BATTERY 1.5V AAA	3	3	5	5	3	3	5	5

APPROVAL	CHECK	DRAWING	DESIGN	MODEL		PARTS NAME	PACKING DRAWING
00.07.05		00.07.05		SCALE	TOLERANCE		
Chae il Lee		Dong il Choi		N / S	LESS; ±	MODEL NO.	AVR 510/310/210/110 US AVR5000/4000/3000/2000 EU
					LESS; ±		
				UNIT	LESS; ±		
				m/m	LESS;		